FERC rendition of the electronically filed tariff records in Docket No. [include if docket no. exists]

Filing
Data: CID:
C000038
Filing Title: National Grid and Covanta Niagara Interconnection Agreement 2205
Company Filing Identifier: 971
Type of Filing Code: 10
Associated Filing Identifier: [if
applicable] Tariff Title: NYISO
Agreements
Tariff ID: 58
Payment Confirmation:
N Suspension Motion:

Tariff Record Data:
Record Content Description: Service Agreement No. 2205
Tariff Record Title: NiMo and Covanta Interconnection Agreement 2205
Record Version Number: 0.0.0
Option Code: A Tariff
Record ID: 159
Tariff Record Collation Value:
7076000
Tariff Record Parent Identifier: 2
Proposed Date: 2014-12-30
Priority Order: 500
Record Change Type:
New Record Content
Type: 2
Associated Filing Identifier: [Source - if applicable]

Service Agreement No. 2205

AMENDED AND RESTATED INTERCONNECTION AGREEMENT

BETWEEN

NIAGARA MOHAWK POWER CORPORATION d/b/a NATIONAL GRID

AND

COVANTA NIAGARA, L.P.

INTERCONNECTION AGREEMENT

This Amended and Restated INTERCONNECTION AGREEMENT (hereinafter referred to as the "AGREEMENT") is entered into as of December 30, 2014, by and between NIAGARA MOHAWK POWER CORPORATION d/b/a NATIONAL GRID (hereinafter referred to as "NATIONAL GRID") and COVANTA NIAGARA, L.P. (hereinafter referred to as "INTERCONNECTION CUSTOMER"). NATIONAL GRID and INTERCONNECTION CUSTOMER may be referred to hereunder, individually, as a "Party" or, collectively, as the "Parties".

WHEREAS, in 2005, American Ref Fuel of Niagara, L.P. ("AMER-REF FUEL") changed its name to Covanta Niagara, L.P.; and

WHEREAS, NATIONAL GRID and AMER-REF FUEL entered into a power purchase agreement, dated as of June 29, 1993, and amended from time to time, for the purchase of electricity by NATIONAL GRID (the "POWER PURCHASE AGREEMENT"), and an Interconnection Agreement entered into as of October 31, 1994 (the "INTERCONNECTION AGREEMENT"), each of which expires on December 29, 2014; and

WHEREAS, INTERCONNECTION CUSTOMER now owns and operates the electric generating plant (hereinafter referred to as the "PRODUCTION FACILITY"), formerly owned and operated by Occidental Chemical Corporation (hereinafter referred to as "OCCIDENTAL CHEMICAL") and Hooker Energy Corporation (hereinafter together with OCCIDENTAL CHEMICAL referred to as "OCCIDENTAL"), in the Town of Niagara Falls, County of Niagara, State of New York, with a nominal installed capacity not to exceed 42,400 kilowatts and associated electric energy, which is approximately 335,000,000 kilowatt-hours per year (hereinafter referred to as "ELECTRICITY"), so arranged that the ELECTRICITY can be delivered to the electric transmission system of NATIONAL GRID (hereinafter referred to as the "TRANSMISSION SYSTEM") at the RECEIVING POINT (as defined in paragraph 1.7 below); and

WHEREAS, OCCIDENTAL CHEMICAL, AMER-REF FUEL, and NATIONAL GRID entered into a certain Indemnification Agreement (hereinafter referred to as the "INDEMNIFICATION AGREEMENT"), dated as of May 5, 1993, which provides for the PRODUCTION FACILITY'S interconnection to the TRANSMISSION SYSTEM through OCCIDENTAL's substation for an interim period ending on the earlier of May 5, 1995 or when AMER-REF FUEL constructed a new substation (hereinafter referred to as the "NEW SUBSTATION"); and

WHEREAS, in light of the expiring POWER PURCHASE AGREEMENT and INTERCONNECTION AGREEMENT, INTERCONNECTION CUSTOMER and NATIONAL GRID have negotiated this AGREEMENT to amend and restate the INTERCONNECTION AGREEMENT in its entirety and to continue the interconnection of the PRODUCTION FACILITY to the TRANSMISSION SYSTEM through the NEW SUBSTATION and associated interconnection facilities and to set forth each Party's responsibilities with regard to the design, procurement, construction, ownership, operation and maintenance of such facilities, for an additional five years, subject to the understanding that if INTERCONNECTION CUSTOMER desires to remain so interconnected thereafter, then INTERCONNECTION CUSTOMER shall enter into a new interconnection agreement substantially consistent with the then current New York Independent System Operator, Inc.'s ("NYISO") *pro forma*

1

Large Generator Interconnection Agreement upon the expiration of this Agreement;

Now THEREFORE, in consideration of the mutual obligations and undertakings set forth herein, the Parties to this AGREEMENT covenant and agree as follows:

1. Agreement to Interconnect: Description of INTERCONNECTION FACILITY

1.1. NATIONAL GRID and INTERCONNECTION CUSTOMER agree to interconnect the PRODUCTION FACILITY to the TRANSMISSION SYSTEM in accordance with the terms and conditions contained herein.

1.2. The TRANSMISSION SYSTEM and PRODUCTION FACILITY shall be interconnected by means of the INTERCONNECTION FACILITY, which NATIONAL GRID shall repair, operate, own and maintain in accordance with good utility practice, at INTERCONNECTION CUSTOMER'S expense. In this AGREEMENT, "good utility practice" means any of the practices, methods and acts engaged in or approved by a significant portion of the electric industry during the relevant time period, or any of the practices, methods and acts which, in the exercise of reasonable judgment in light of the facts known at the time the decision was made, could have been expected to accomplish the desired result at a reasonable cost consistent with good business practices, reliability, safety and expedition. Good Utility Practice is not intended to be limited to the optimum practice, method, or act to the exclusion of all others, but rather to delineate acceptable practices, methods, or acts generally accepted in the region.

1.3. INTERCONNECTION CUSTOMER shall provide to NATIONAL GRID all necessary easements sufficient for placement, construction, and maintenance of the INTERCONNECTION FACILITY (such easements hereinafter referred to as the "EASEMENT"). The width of the transmission corridor shall be designated by NATIONAL GRID. The format and content of the EASEMENT shall be approved by NATIONAL GRID.

1.4. Prior to conveyance of said Easements, INTERCONNECTION CUSTOMER agrees to provide to NATIONAL GRID an instrument survey of the real property; and copies of deeds and other title documents together with a title insurance policy, containing only standard exceptions, insuring marketability of the real property and interest in the real property over which the Easements will be conveyed. Prior to conveyance of the Easements, NATIONAL GRID shall be given the opportunity to review all title documents and INTERCONNECTION CUSTOMER shall be responsible for correcting any situations which NATIONAL GRID reasonably deems unacceptable or any deficiencies which could impede the transfer of the Easements pursuant to this AGREEMENT.

1.5. INTERCONNECTION CUSTOMER agrees to indemnify and save NATIONAL GRID harmless from all liability, cost, expense, fees, fines, penalties or amounts paid in settlement of claims (including reasonable attorney's fees), civil and criminal ("Claims"), as a result of any claim by a third Party, including governmental or regulatory authority resulting from the presence of or for the removal or management of any hazardous substance (as defined by the Comprehensive Environmental Response, Compensation and Liability Act of 1980) from or affecting the real property interests of the INTERCONNECTION FACILITY, provided, however, that INTERCONNECTION CUSTOMER shall not indemnify NATIONAL GRID against any Claims which are due in whole or in part by the actions of NATIONAL GRID or its subsidiaries, affiliates or agents.

2

1.6. INTERCONNECTION CUSTOMER agrees to obtain all necessary licenses, certificates, permits and approvals for the Interconnection Facility at its sole expense. Prior to the Initial Synchronization, INTERCONNECTION CUSTOMER shall convey to NATIONAL GRID said licenses, certificates, permits and approvals.

1.7. The INTERCONNECTION FACILITY shall consist of a double circuit 115 kilovolt tap and the EASEMENT. The INTERCONNECTION FACILITY shall connect the PRODUCTION FACILITY at the NEW SUBSTATION. The point of connection between the NEW SUBSTATION and the INTERCONNECTION FACILITY shall be known as the RECEIVING POINT. The RECEIVING POINT shall be as indicated on a one-line diagram attached hereto as Schedule A.

2. Representatives and Warranties of Parties

2.1. INTERCONNECTION CUSTOMER is a limited partnership duly organized and validly existing under the laws of the State of Delaware. INTERCONNECTION CUSTOMER is qualified to do business under the laws of the State of New York, is in good standing under the laws of the State of New York, has the power and authority to own its properties, to carry on its business as now being conducted, to enter into this

AGREEMENT and the transactions contemplated herein and perform and carry out all covenants and obligations on its part to be performed under and pursuant to this AGREEMENT.

2.2. NATIONAL GRID is a corporation duly organized, validly existing and qualified to do business under the laws of the State of New York, is in good standing under its certificate of incorporation and the laws of the State of New York, has the corporate authority to own its properties, to carry on its business as now being conducted, and to enter into this AGREEMENT and the transactions contemplated herein and perform and carry out all covenants and obligations on its part to be performed under and pursuant to this AGREEMENT.

3. Interconnection Study

3.1. NATIONAL GRID has performed at INTERCONNECTION CUSTOMER'S expense, those studies necessary to determine the equipment and facilities necessary and desirable for the construction and operation of the INTERCONNECTION FACILITY, which studies are attached hereto as Schedule B.

4. Construction of INTERCONNECTION FACILITY and SYSTEM FACILITIES

4.1. NATIONAL GRID shall design and construct at INTERCONNECTION CUSTOMER's expense the INTERCONNECTION FACILITY and any reinforcements and additions to the TRANSMISSION SYSTEM necessary to connect the INTERCONNECTION FACILITY to said TRANSMISSION SYSTEM (such reinforcements and additions hereinafter referred to as "SYSTEM FACILITIES").

5. Construction of the Parties' Facilities

3

5.1. The Parties shall agree upon schedules for INTERCONNECTION CUSTOMER'S construction of the NEW SUBSTATION and NATIONAL GRID'S construction of the INTERCONNECTION FACILITY and SYSTEM FACILITIES. Such schedules shall be consistent with each other and with the POWER PURCHASE AGREEMENT and shall provide for a scheduled date for the initial transmission of ELECTRICITY into the TRANSMISSION SYSTEM through the INTERCONNECTION FACILITY (such transmission hereinafter referred to as "INITIAL SYNCHRONIZATION") on or before May 5, 1995, and scheduled dates for completion of the NEW SUBSTATION, granting of the EASEMENT, design and construction in the field of electric transmission and substation facilities, acquisition of licenses and permits for the NEW SUBSTATION, INTERCONNECTION FACILITY and SYSTEM FACILITIES, and completion of the INTERCONNECTION FACILITY and SYSTEM FACILITIES on dates prior to the scheduled date for INITIAL SYNCHRONIZATION. Each Party shall provide the other with status reports on the progress of its construction. The scheduled dates for completion of the INTERCONNECTION FACILITY and SYSTEM FACILITIES and for INITIAL SYNCHRONIZATION may be postponed to the extent required by delays in INTERCONNECTION CUSTOMER'S construction schedule. NATIONAL GRID shall make a good faith effort to meet the scheduled dates for completion of the INTERCONNECTION FACILITY and SYSTEM FACILITIES and for INITIAL SYNCHRONIZATION. If INITIAL SYNCHRONIZATION is delayed beyond May 5, 1995 then NATIONAL GRID shall agree to an extension of the INDEMNIFICATION AGREEMENT to a date corresponding to such delay (such date hereinafter referred to as the "EXTENSION DATE") without any liability of any kind to NATIONAL GRID. Neither Party shall be liable to the other Party for any delays in completion of construction of the INTERCONNECTION FACILITY or SYSTEM FACILITIES respectively, except that said delay is caused by the gross negligence or willful misconduct of the other Party. Anything in this AGREEMENT to the contrary notwithstanding, neither Party shall be liable to the other for any indirect or consequential damages, including but not limited to, loss of profit or revenue.

6. Modification to, Abandonment or Retirement of INTERCONNECTION FACILITY

6.1. If, during the term of this AGREEMENT, NATIONAL GRID reasonably determines in accordance with good utility practice that its TRANSMISSION SYSTEM must be relocated or rearranged or NATIONAL GRID is ordered by governmental authority to relocate or rearrange its TRANSMISSION SYSTEM (including without limitation in either case the abandonment or retirement of portions of its TRANSMISSION SYSTEM), and if as a result modification, abandonment or retirement of the INTERCONNECTION FACILITY is required, NATIONAL GRID shall promptly give INTERCONNECTION CUSTOMER written notice of such relocation, rearrangement, abandonment or retirement and shall attempt to defer such relocation, abandonment, retirement or rearrangement until a new INTERCONNECTION FACILITY can be reconfigured so that INTERCONNECTION CUSTOMER'S interconnection may continue without interruption.

6.2. Whether the relocation or rearrangement of the TRANSMISSION SYSTEM is ordered or required by governmental authority or is by NATIONAL GRID's own determination, NATIONAL GRID shall perform or have performed, at INTERCONNECTION CUSTOMER'S expense, the studies necessary to identify a new interconnection facility and shall inform INTERCONNECTION CUSTOMER of NATIONAL GRID's estimate of the costs of the construction of such facility, and INTERCONNECTION CUSTOMER shall either (a) reimburse NATIONAL GRID for the actual costs of such construction promptly upon completion thereof; (b) construct, at its own expense, such facility; or (c) terminate this AGREEMENT upon at least thirty (30) days written notice to NATIONAL GRID and pay all costs associated with the retirement of the INTERCONNECTION FACILITY.

4

6.3. If the relocation, rearrangement, abandonment or retirement of the TRANSMISSION SYSTEM is ordered or required by governmental authority, NATIONAL GRID shall cooperate with INTERCONNECTION CUSTOMER in INTERCONNECTION CUSTOMER'S efforts to seek reimbursement from the governmental authority for its mutually agreed upon share of the costs of such relocation, rearrangement, abandonment or retirement. In no event, however, shall NATIONAL GRID be responsible for reimbursing INTERCONNECTION CUSTOMER for any costs associated with such relocation, rearrangement, abandonment or retirement.

6.4. If INTERCONNECTION CUSTOMER elects to construct a new interconnection facility, construction, title, and payment shall be in accordance with the terms and conditions of a comprehensive interconnection agreement which shall be entered into between the Parties.

7. Cost Payments

7.1. INTERCONNECTION CUSTOMER shall reimburse NATIONAL GRID for any cost or expense actually and reasonably incurred by NATIONAL GRID pursuant to this AGREEMENT for the construction, and installation of the INTERCONNECTION FACILITY and SYSTEM FACILITIES in accordance with the terms of this Article 7.3.

7.2. INTERCONNECTION CUSTOMER agrees to pay NATIONAL GRID twenty six thousand dollars ($26,000) a year as total compensation for the operation, maintenance and repair of the INTERCONNECTION FACILITY and SYSTEM FACILITIES by NATIONAL GRID.

7.3. INTERCONNECTION CUSTOMER agrees to pay all invoices within thirty (30) days from date of the invoice. In accordance with NATIONAL GRID's P.S.C. No. 220 Schedule for Electric Service ("PSC No. 220 Electricity Tariff"), if any invoice remains unpaid thirty (30) days from the invoice date, NATIONAL GRID shall apply to the unpaid balance, and INTERCONNECTION CUSTOMER shall pay, a finance charge at the rate of one and one-half percent (1.5%) per month, but in no event more than the maximum allowed by law.

8. Insurance Provisions

8.1. INTERCONNECTION CUSTOMER agrees to insure the INTERCONNECTION FACILITY against all loss or damage of the kinds usually insured against by operators similarly situated.

NATIONAL GRID shall be named an additional insured on the policy and evidence of such property damage insurance shall be provided to NATIONAL GRID as its interest may appear, either by delivery of the original policy, or a Certified Copy of the policy or by a Certificate of Insurance. The amount of the insurance shall not be less than the "full insurable value" which shall mean the total replacement cost of excavation and underground structures or equipment.

INTERCONNECTION CUSTOMER may insure the INTERCONNECTION FACILITY under the blanket insurance policy or policies which cover other properties, and evidence of this insurance shall be provided to NATIONAL GRID.

8.2. INTERCONNECTION CUSTOMER agrees to provide and maintain Public Liability Insurance including contractual liability in a minimum amount of $1,000,000 each occurrence

5

for Bodily Injury (including death) and $1,000,000 each occurrence for Property Damage, or if a Combined Single Limit (CSL) is applicable, a limit of $1,500,000 each occurrence for Bodily Injury and Property Damage shall be provided.

8.3. Each Party shall provide Workers' Compensation and Employers Liability covering each Party's employees as required by New York State Law.

8.4. All insurance policies shall be written by reputable insurance companies acceptable to NATIONAL GRID. INTERCONNECTION CUSTOMER agrees that the insurance required by this AGREEMENT shall be maintained for the life of the AGREEMENT. All insurance policies shall provide that in the event of cancellation or material diminution of coverage, ten (10) days prior written notice shall be given to NATIONAL GRID.

9. Taxes

9.1. INTERCONNECTION CUSTOMER shall reimburse NATIONAL GRID for any and all federal, state, local or other taxes properly imposed pursuant to law by any governmental authority on NATIONAL GRID as a result of INTERCONNECTION CUSTOMER'S payments to NATIONAL GRID for the acquisition, construction, installation, operation, maintenance and repair of the INTERCONNECTION FACILITY pursuant to this AGREEMENT; subject, however, to the following limitations:

(a) INTERCONNECTION CUSTOMER shall not be required to reimburse NATIONAL GRID for any taxes resulting from the payment for construction of the INTERCONNECTION FACILITY being treated as a contribution in aid of construction (within the meaning of Internal Revenue Service Notice 88-129, 1988-2, C.B. 541 and Notice 90-60, 1990-2, C.B. 345, or subsequent law or authority) if such treatment results from (i) a markup charged by NATIONAL GRID to INTERCONNECTION CUSTOMER or (ii) inclusion of the INTERCONNECTION FACILITY by NATIONAL GRID in its rate base.

(b) Any taxes reimbursable by INTERCONNECTION CUSTOMER to NATIONAL GRID under this provision shall be net of any tax benefits available to NATIONAL GRID, including but not limited to income tax deductions or tax depreciation; and

9.2. Any payment or reimbursement of tax by INTERCONNECTION CUSTOMER to NATIONAL GRID under this Article 9 shall include an amount necessary to reimburse NATIONAL GRID for any net actual federal or New York state income taxes, if any, resulting from the payment or reimbursement itself. Any payments by INTERCONNECTION CUSTOMER to NATIONAL GRID required by this Article 9 shall be made in accordance with Article 7.3 above.

10. Notices

10.1. All written notifications pursuant to this AGREEMENT shall be personally delivered or mailed by certified or registered first class mail, return receipt requested, as follows:

6

To NATIONAL GRID:

DIRECTOR, TRANSMISSION COMMERCIAL SERVICES

40 Sylvan Road
Waltham, MA 02451
Phone: 781-907-2422
Fax: 781-296-8088
Email: bill.malee@nationalgrid.com

To COVANTA NIAGARA:

Brian Kent
Facility Manager
Covanta Niagara, L.P.
100 Energy Blvd at 56th St.
Niagara Falls, NY 14304
Tel: 716-278-8506
Fax: 716-284-2961
bkent@covanta.com

Kirk J. Bily
Vice President & Deputy General Counsel
445 South Street
Morristown, NJ 07960
Tel: 862-345-5045
Fax: 862-345-5140
Email: kbily@covanta.com

Sami Kabbani
Vice President, Energy
445 South Street, Morristown, NJ 07960
Tel: 862-345-5227
Email: Skabbani@covanta.com

Either Party may change its address for notices by written notice to the other in the manner provided above.

11. Term

11.1. This AGREEMENT, when executed by the Parties, shall be in effect from the date first above written to December 29, 2019, subject to acceptance for filing or approval by the Federal Energy Regulatory Commission.

11.2. Upon the expiration of this Agreement, if INTERCONNECTION CUSTOMER desires to remain interconnected to the TRANSMISSION SYSTEM thereafter, then the Parties shall enter into a new interconnection agreement substantially consistent with the then current NYISO *pro forma* Large Generator Interconnection Agreement.

12. Termination for Breach/Default

12.1. Each Party (the "Aggrieved Party") may, by written notice to the other, terminate this AGREEMENT in the event the other (the "Defaulting Party") abandons its work or facilities under this AGREEMENT or the POWER PURCHASE AGREEMENT; becomes insolvent; or assigns or sublets this AGREEMENT in a manner which is inconsistent with the terms and conditions of this AGREEMENT; or is violating any of the conditions, terms, obligations, or covenants of this AGREEMENT.

7

12.2. If within a period of one hundred eighty (180) days of receipt of such notice the Defaulting Party cures the default or breach cited by the Aggrieved Party in such notice, to the reasonable satisfaction of that Party, such notice shall become null and void and of no effect. Otherwise, such notice shall remain in effect, and the obligations of the Aggrieved Party under this AGREEMENT shall cease and terminate at the expiration of such one hundred eighty (180) day period.

12.3. The Defaulting Party shall be liable to and indemnify the Aggrieved Party for all costs, expenses, liabilities, damages and obligations, including attorneys' fees, that result from or relate to a material breach or default of this AGREEMENT.

12.4. Termination of this AGREEMENT shall not relieve the Defaulting Party of any of its outstanding liabilities and obligations hereunder, and the Aggrieved Party may take whatever judicial or administrative actions as appear necessary or desirable to enforce its rights hereunder. The rights specified herein are not exclusive and shall be in addition to all other remedies available to the Aggrieved Party, either at law or in equity, for default or breach of any provision of this AGREEMENT.

13. Force Majeure

13.1. Neither Party shall be considered to be in default or breach hereunder, and shall be excused from performance hereunder, if and to the extent that it shall be delayed in or prevented from performing or carrying out any provision of this AGREEMENT by reason of or through storm, flood, lightning, earthquake, fire, ice, snow, epidemic, war, invasion, riot, civil disturbance, sabotage, explosion, insurrection, military or usurped power, strikes, stoppage of labor, labor dispute, failure of contractors or supplies of material, action of any court or governmental authority, or any civil or military authority de facto or de jure, act of God or public enemy, or any other cause beyond such Party's control.

13.2. The Party claiming force majeure shall use due diligence to resume performance or the provision of service hereunder as soon as practicable.

14. Relationship of Parties

14.1. Nothing contained in this AGREEMENT shall be construed or deemed to cause, create, constitute, give effect to, or otherwise recognize INTERCONNECTION CUSTOMER and NATIONAL GRID to be partners, joint venturers, employer and employee, principal and agent, or any other business association, with respect to any matter.

15. Third-Party Beneficiary

15.1. No person or party shall have any rights or interests, direct or indirect, in this AGREEMENT or the services or facilities to be provided hereunder, or both, except the Parties, their successors, and authorized assigns.

16. Assignment

16.1. INTERCONNECTION CUSTOMER may not assign or otherwise transfer any of its rights or obligations hereunder without the prior consent of NATIONAL GRID, which consent shall not be unreasonably withheld. Any assignment in contravention of this Article 16 without the prior written consent of NATIONAL GRID shall be considered null and void from its inception.

8

16.2. INTERCONNECTION CUSTOMER may upon written notice to NATIONAL GRID, collaterally assign the AGREEMENT to a lender for collateral security purposes in connection with the financing or refinancing of the PRODUCTION FACILITY and/or INTERCONNECTION FACILITY.

16.3. Any NATIONAL GRID-authorized assignment shall not relieve INTERCONNECTION CUSTOMER of the responsibility of full compliance with the requirements of this AGREEMENT.

16.4. INTERCONNECTION CUSTOMER shall not make any assignment unless and until its assignee in interest has agreed to undertake the obligations accepted by INTERCONNECTION CUSTOMER herein, and has provided written assurances of continued performance and protection against liability upon assignment; however this provision shall not apply to any collateral assignment pursuant to paragraph 16.2 above.

16.5. This AGREEMENT shall bind and inure to the benefit of the Parties to this AGREEMENT, their successors and permitted assigns.

17. Waiver

17.1. No provision of this AGREEMENT may be waived except by mutual agreement of the Parties as expressed in writing and signed by both Parties.

17.2. No express waiver in any specific instance as provided in a required writing shall be construed as a waiver of future instances unless specifically so provided in the required writing.

17.3. The failure of either Party to insist in anyone or more instances upon the strict performance of any of the provisions of this AGREEMENT, or to exercise any right herein, shall not be construed as a waiver or relinquishment for the future of such strict performance of such provision or the exercise of such right.

18. Amendment/Modification

18.1. This AGREEMENT may be amended or modified only if the amendment or modification is in writing and executed by both Parties.

19. Choice of Law/Jurisdiction/Service of Process

19.1. This AGREEMENT shall be deemed to be executed in the State of New York and shall be interpreted and enforced according to the Laws of the State of New York.

19.2. The Parties agree to submit to the jurisdiction of the courts in the State of New York for the purposes of interpretation and enforcement of this AGREEMENT; provided, however, that this Article 19 shall not divest an administrative agency of competent jurisdiction from interpreting or enforcing this AGREEMENT.

20. Severability

20.1. If any term of this AGREEMENT, or the interpretation or application of any term

9

or provision to any prior circumstance, is held to be unenforceable, illegal, or invalid by a court or agency of competent jurisdiction, the remainder of this AGREEMENT, or the interpretation or application of all other terms or provisions to persons or circumstances other than those that are unenforceable, illegal, or invalid, shall not be affected thereby and each term and provision shall be valid and be enforced to the fullest extent permitted by law.

21. Headings

21.1. The headings in this AGREEMENT are included herein for convenience of reference only and shall not constitute a part of this AGREEMENT for any other purpose, or limit or be used as an aid in construing the provisions of this AGREEMENT.

22. Integration/Merger/Survivability

22.1. This AGREEMENT sets forth the entire understanding and agreement between the Parties as to the subject matter of this AGREEMENT, and merges and supersedes all prior and contemporaneous understandings or agreements, oral or written, between the Parties as to the subject matter of this AGREEMENT.

IN WITNESS WHEREOF, the Parties hereto have caused this instrument to be executed as of the day and year first above written.

COVANTA NIAGARA, L.P.

KAB By: Seth Myones

Title: EVP & COO

Date: 1/16/2015

NIAGARA MOHAWK POWER CORPORATION
d/b/a NATIONAL GRID

By: Will L Malee

William Malee

Title: Director, Transmission Commercial Services

Date: DEC 29 2014

Schedule A

Interconnection Diagram

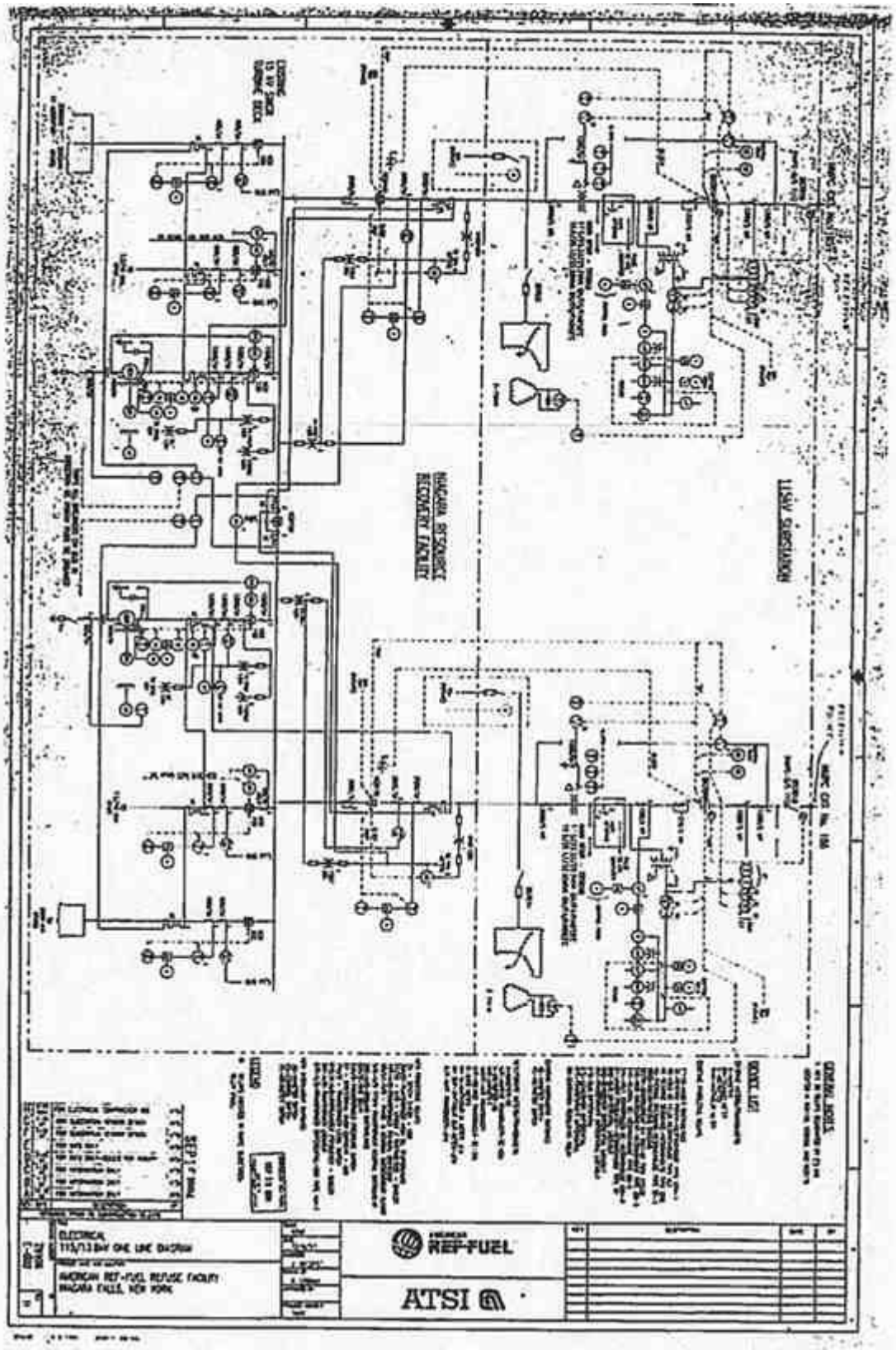
ELECTRICAL
115/13.8kV ONE LINE DIAGRAM
AMERICAN REF-FUEL REFUSE FACILITY
NIAGARA FALLS, NEW YORK
AMERICAN REF-FUEL
ATSI