SERVICE AGREEMENT NO. 2593

SERVICE AGREEMENT NO. 2593

INTERCONNECTION AGREEMENT

AMONG THE

NEW YORK INDEPENDENT SYSTEM OPERATOR, INC.

AND

NIAGARA MOHAWK POWER CORPORATION d/b/a NATIONAL GRID

AND

PPM ROARING BROOK, LLC

Dated as of January 25, 2021

(Roaring Brook Wind Project)

SERVICE AGREEMENT NO. 2593

TABLE OF CONTENTS

Page Number

ARTICLE 1. DEFINITIONS 1
ARTICLE 2. EFFECTIVE DATE, TERM AND TERMINATION 10
2.1 Effective Date 10
2.2 Term of Agreement 10
2.3 Termination 10
2.4 Termination Costs 11
2.5 Disconnection 12
2.6 Survival 12
ARTICLE 3. REGULATORY FILINGS 12
ARTICLE 4. SCOPE OF INTERCONNECTION SERVICE 12
4.1 Provision of Service 12
4.2 No Transmission Delivery Service 13
4.3 No Other Services 13
ARTICLE 5. INTERCONNECTION FACILITIES ENGINEERING, PROCUREMENT, AND CONSTRUCTION 13
5.1 Options 13
5.2 General Conditions Applicable to Option to Build 15
5.3 Liquidated Damages 16
5.4 Power System Stabilizers 17
5.5 Equipment Procurement 18
5.6 Construction Commencement 18
5.7 Work Progress 19
5.8 Information Exchange 19
5.9 Other Interconnection Options 19
5.10 Developer's Attachment Facilities ("DAF") 20
5.11 Connecting Transmission Owner's Attachment Facilities Construction 21
5.12 Access Rights 21
5.13 Lands of Other Property Owners 22
5.14 Permits 22
5.15 Early Construction of Base Case Facilities 22
5.16 Suspension 22
5.17 Taxes 23
5.18 Tax Status; Non-Jurisdictional Entities 28
5.19 Modification 28
ARTICLE 6. TESTING AND INSPECTION 29
6.1 Pre-Commercial Operation Date Testing and Modifications 29
6.2 Post-Commercial Operation Date Testing and Modifications 30
6.3 Right to Observe Testing 30
6.4 Right to Inspect 30
ARTICLE 7. METERING 30
7.1 General 30

7.2 Check Meters 31

SERVICE AGREEMENT NO. 2593

7.3 Standards 31
7.4 Testing of Metering Equipment 31
7.5 Metering Data 32
ARTICLE 8. COMMUNICATIONS 32
8.1 Developer Obligations 32
8.2 Remote Terminal Unit 32
8.3 No Annexation 33
ARTICLE 9. OPERATIONS 33
9.1 General 33
9.2 NYISO and Connecting Transmission Owner Obligations 33
9.3 Developer Obligations 33
9.4 Start-Up and Synchronization 33
9.5 Real and Reactive Power Control and Primary Frequency Response 34
9.6 Outages and Interruptions 37
9.7 Switching and Tagging Rules 41
9.8 Use of Attachment Facilities by Third Parties 41
9.9 Disturbance Analysis Data Exchange 42
9.10 Phasor Measurement Units 42
ARTICLE 10. MAINTENANCE 43
10.1 Connecting Transmission Owner Obligations 43
10.2 Developer Obligations 43
10.3 Coordination 43
10.4 Secondary Systems 43
10.5 Operating and Maintenance Expenses 43
ARTICLE 11. PERFORMANCE OBLIGATION 44
11.1 Developer's Attachment Facilities 44
11.2 Connecting Transmission Owner's Attachment Facilities 44
11.3 System Upgrade Facilities and System Deliverability Upgrades 44
11.4 Special Provisions for Affected Systems 44
11.5 Provision of Security 44
11.6 Developer Compensation for Emergency Services 45
11.7 Line Outage Costs 45
ARTICLE 12. INVOICE 45
12.1 General 45
12.2 Final Invoice 45
12.3 Payment 46
12.4 Disputes 46
ARTICLE 13. EMERGENCIES 46
13.1 Obligations 46
13.2 Notice 46
13.3 Immediate Action 47
13.4 NYISO and Connecting Transmission Owner Authority 47
13.5 Developer Authority 48
13.6 Limited Liability 48
ARTICLE 14. REGULATORY REQUIREMENTS AND GOVERNING LAW 48

14.1 Regulatory Requirements..... 48

SERVICE AGREEMENT NO. 2593

14.2 Governing Law 48
ARTICLE 15. NOTICES 49
15.1 General 49
15.2 Billings and Payments 49
15.3 Alternative Forms of Notice 49
15.4 Operations and Maintenance Notice 49
ARTICLE 16. FORCE MAJEURE 49
ARTICLE 17. DEFAULT 50
17.1 General 50
17.2 Right to Terminate 50
ARTICLE 18. INDEMNITY, CONSEQUENTIAL DAMAGES AND INSURANCE 50
18.1 Indemnity 50
18.2 No Consequential Damages 52
18.3 Insurance 52
ARTICLE 19. ASSIGNMENT 54
ARTICLE 20. SEVERABILITY 55
ARTICLE 21. COMPARABILITY 55
ARTICLE 22. CONFIDENTIALITY 55
22.1 Confidentiality 55
22.2 Term 55
22.3 Confidential Information 55
22.4 Scope 56
22.5 Release of Confidential Information 56
22.6 Rights 56
22.7 No Warranties 56
22.8 Standard of Care 57
22.9 Order of Disclosure 57
22.10 Termination of Agreement 57
22.11 Remedies 57
22.12 Disclosure to FERC, its Staff, or a State 58
22.13 Required Notices Upon Requests or Demands for Confidential Information ..58
ARTICLE 23. DEVELOPER AND CONNECTING TRANSMISSION OWNER NOTICES OF ENVIRONMENTAL RELEASES 58
ARTICLE 24. INFORMATION REQUIREMENT 59
24.1 Information Acquisition 59
24.2 Information Submission by Connecting Transmission Owner 59
24.3 Updated Information Submission by Developer 59
24.4 Information Supplementation 60
ARTICLE 25. INFORMATION ACCESS AND AUDIT RIGHTS 60
25.1 Information Access 60
25.2 Reporting of Non-Force Majeure Events 61
25.3 Audit Rights 61
25.4 Audit Rights Periods 61
25.5 Audit Results 62
ARTICLE 26. SUBCONTRACTORS 62

26.1 General 62

SERVICE AGREEMENT NO. 2593

26.2 Responsibility of Principal 62
26.3 No Limitation by Insurance 62
ARTICLE 27. DISPUTES 62
27.1 Submission 62
27.2 External Arbitration Procedures 63
27.3 Arbitration Decisions 63
27.4 Costs 63
27.5 Termination 63
ARTICLE 28. REPRESENTATIONS, WARRANTIES AND COVENANTS 63
28.1 General 63
ARTICLE 29. MISCELLANEOUS 64
29.1 Binding Effect 64
29.2 Conflicts 64
29.3 Rules of Interpretation 65
29.4 Compliance 65
29.5 Joint and Several Obligations 65
29.6 Entire Agreement 65
29.7 No Third Party Beneficiaries 66
29.8 Waiver 66
29.9 Headings 66
29.10 Multiple Counterparts 66
29.11 Amendment 66
29.12 Modification by the Parties 66
29.13 Reservation of Rights 67
29.14 No Partnership 67
29.15 Other Transmission Rights 67

Appendices

SERVICE AGREEMENT NO. 2593

STANDARD LARGE GENERATOR INTERCONNECTION AGREEMENT

THIS STANDARD LARGE GENERATOR INTERCONNECTION AGREEMENT ("Agreement") is made and entered into this 25th day of January 2021, by and among PPM Roaring Brook, LLC, a limited liability company organized and existing under the laws of the State of Oregon ("Developer" with a Large Generating Facility), the New York Independent System Operator, Inc., a not-for-profit corporation organized and existing under the laws of the State of New York ("NYISO"), and Niagara Mohawk Power Corporation d/b/a National Grid a corporation organized and existing under the laws of the State of New York ("Connecting Transmission Owner"). Developer, the NYISO, or Connecting Transmission Owner each may be referred to as a "Party" or collectively referred to as the "Parties."

RECITALS

WHEREAS, NYISO operates the New York State Transmission System and Connecting Transmission Owner owns certain facilities included in the New York State Transmission System;

WHEREAS, Developer intends to own, lease and/or control and operate the Generating Facility identified as a Large Generating Facility in Appendix C to this Agreement; and,

WHEREAS, Developer, NYISO, and Connecting Transmission Owner have agreed to enter into this Agreement for the purpose of interconnecting the Large Generating Facility with the New York State Transmission System;

NOW, THEREFORE, in consideration of and subject to the mutual covenants contained herein, it is agreed:

ARTICLE 1. DEFINITIONS

Whenever used in this Agreement with initial capitalization, the following terms shall have the meanings specified in this Article 1. Terms used in this Agreement with initial capitalization that are not defined in this Article 1 shall have the meanings specified in Section 1 of the ISO OATT, Section 30.1 of Attachment X of the ISO OATT, Section 25.1.2 of Attachment S of the ISO OATT, the body of the LFIP or the body of this Agreement.

Affected System shall mean an electric system other than the transmission system owned, controlled or operated by the Connecting Transmission Owner that may be affected by the proposed interconnection.

Affected System Operator shall mean the entity that operates an Affected System.

Affected Transmission Owner shall mean the New York public utility or authority (or its designated agent) other than the Connecting Transmission Owner that (i) owns facilities used for the transmission of Energy in interstate commerce and provides Transmission Service under the

Tariff, and (ii) owns, leases or otherwise possesses an interest in a portion of the New York State Transmission System where System Deliverability Upgrades, System Upgrade Facilities, or

SERVICE AGREEMENT NO. 2593

Network Upgrade Facilities are or will be installed pursuant to Attachment P, Attachment X, Attachment Z, or Attachment S to the ISO OATT.

Affiliate shall mean, with respect to a person or entity, any individual, corporation, partnership, firm, joint venture, association, joint-stock company, trust or unincorporated organization, directly or indirectly controlling, controlled by, or under common control with, such person or entity. The term "control" shall mean the possession, directly or indirectly, of the power to direct the management or policies of a person or an entity. A voting interest of ten percent or more shall create a rebuttable presumption of control.

Ancillary Services shall mean those services that are necessary to support the transmission of Capacity and Energy from resources to Loads while maintaining reliable operation of the New York State Transmission System in accordance with Good Utility Practice.

Applicable Laws and Regulations shall mean all duly promulgated applicable federal, state and local laws, regulations, rules, ordinances, codes, decrees, judgments, directives, or judicial or administrative orders, permits and other duly authorized actions of any Governmental Authority, including but not limited to Environmental Law.

Applicable Reliability Councils shall mean the NERC, the NPCC and the NYSRC.

Applicable Reliability Standards shall mean the requirements and guidelines of the Applicable Reliability Councils, and the Transmission District to which the Developer's Large Generating Facility is directly interconnected, as those requirements and guidelines are amended and modified and in effect from time to time; provided that no Party shall waive its right to challenge the applicability or validity of any requirement or guideline as applied to it in the context of this Agreement.

Attachment Facilities shall mean the Connecting Transmission Owner's Attachment Facilities and the Developer's Attachment Facilities. Collectively, Attachment Facilities include all facilities and equipment between the Large Generating Facility and the Point of Interconnection, including any modification, additions or upgrades that are necessary to physically and electrically interconnect the Large Generating Facility to the New York State Transmission System. Attachment Facilities are sole use facilities and shall not include Stand Alone System Upgrade Facilities, Distribution Upgrades, System Upgrade Facilities or System Deliverability Upgrades.

Base Case shall mean the base case power flow, short circuit, and stability data bases used for the Interconnection Studies by NYISO, Connecting Transmission Owner or Developer; described in Section 30.2.3 of the Standard Large Facility Interconnection Procedures.

Breach shall mean the failure of a Party to perform or observe any material term or condition of this Agreement.

Breaching Party shall mean a Party that is in Breach of this Agreement.

Business Day shall mean Monday through Friday, excluding federal holidays.

SERVICE AGREEMENT NO. 2593

Byway shall mean all transmission facilities comprising the New York State Transmission System that are neither Highways nor Other Interfaces. All transmission facilities in Zone J and Zone K are Byways.

Calendar Day shall mean any day including Saturday, Sunday or a federal holiday.

Capacity Region shall mean one of four subsets of the Installed Capacity statewide markets comprised of (1) Rest of State (*i.e.,* Load Zones A through F); (2) Lower Hudson Valley (*i.e.,* Load Zones G, H and I); (3) New York City (*i.e.,* Load Zone J); and (4) Long Island (*i.e.,* Load Zone K) , except for Class Year Interconnection Facility Studies conducted prior to Class Year 2012, for which "Capacity Region" shall be defined as set forth in Section 25.7.3 of Attachment S to the ISO OATT.

Capacity Resource Interconnection Service ("CRIS") shall mean the service provided by NYISO to Developers that satisfy the NYISO Deliverability Interconnection Standard or that are otherwise eligible to receive CRIS in accordance with Attachment S to the ISO OATT; such service being one of the eligibility requirements for participation as a NYISO Installed Capacity Supplier.

Class Year Deliverability Study shall mean an assessment, conducted by the NYISO staff in cooperation with Market Participants, to determine whether System Deliverability Upgrades are required for Class Year CRIS Projects under the NYISO Deliverability Interconnection Standard.

Commercial Operation shall mean the status of a Large Generating Facility that has commenced generating electricity for sale, excluding electricity generated during Trial Operation.

Commercial Operation Date of a unit shall mean the date on which the Large Generating Facility commences Commercial Operation as agreed to by the Parties, notice of which must be provided to the NYISO in the form of Appendix E-2 to this Agreement.

Confidential Information shall mean any information that is defined as confidential by Article 22 of this Agreement.

Connecting Transmission Owner shall mean the New York public utility or authority (or its designated agent) that (i) owns facilities used for the transmission of Energy in interstate commerce and provides Transmission Service under the Tariff, (ii) owns, leases or otherwise possesses an interest in the portion of the New York State Transmission System or Distribution System at the Point of Interconnection, and (iii) is a Party to this Agreement.

Connecting Transmission Owner's Attachment Facilities shall mean all facilities and equipment owned, controlled or operated by the Connecting Transmission Owner from the Point of Change of Ownership to the Point of Interconnection as identified in Appendix A to the Standard Large Generator Interconnection Agreement, including any modifications, additions or upgrades to such facilities and equipment. Connecting Transmission Owner's Attachment

Facilities are sole use facilities and shall not include Stand Alone System Upgrade Facilities, System Upgrade Facilities, or System Deliverability Upgrades.

SERVICE AGREEMENT NO. 2593

Contingent Facilities shall mean those Attachment Facilities and System Upgrade Facilities and/or System Deliverability Upgrades associated with Class Year Projects upon which the Large Facility's Class Year Project Cost Allocations are dependent, and if delayed or not built, could impact the actual costs and timing of the Large Facility's Project Cost Allocation for System Upgrade Facilities or System Deliverability Upgrades.

Control Area shall mean an electric power system or combination of electric power systems to which a common automatic generation control scheme is applied in order to: (1) match, at all times, the power output of the Generators within the electric power system(s) and capacity and energy purchased from entities outside the electric power system(s), with the Load within the electric power system(s); (2) maintain scheduled interchange with other Control Areas, within the limits of Good Utility Practice; (3) maintain the frequency of the electric power system(s) within reasonable limits in accordance with Good Utility Practice; and (4) provide sufficient generating capacity to maintain Operating Reserves in accordance with Good Utility Practice. A Control Area must be certified by the NPCC.

Default shall mean the failure of a Party in Breach of this Agreement to cure such Breach in accordance with Article 17 of this Agreement.

Developer shall mean an Eligible Customer developing a Large Generating Facility, proposing to connect to the New York State Transmission System, in compliance with the NYISO Minimum Interconnection Standard.

Developer's Attachment Facilities shall mean all facilities and equipment, as identified in Appendix A of this Agreement, that are located between the Large Generating Facility and the Point of Change of Ownership, including any modification, addition, or upgrades to such facilities and equipment necessary to physically and electrically interconnect the Large Generating Facility to the New York State Transmission System. Developer's Attachment Facilities are sole use facilities.

Distribution System shall mean the Connecting Transmission Owner's facilities and equipment used to distribute electricity that are subject to FERC jurisdiction, and are subject to the NYISO's Large Facility Interconnection Procedures in Attachment X to the ISO OATT or Small Generator Interconnection Procedures in Attachment Z to the ISO OATT under FERC Order Nos. 2003 and/or 2006. The term Distribution System shall not include LIPA's distribution facilities.

Distribution Upgrades shall mean the additions, modifications, and upgrades to the Connecting Transmission Owner's Distribution System at or beyond the Point of Interconnection to facilitate interconnection of a Large Facility or Small Generating Facility and render the transmission service necessary to affect the Developer's wholesale sale of electricity in interstate commerce. Distribution Upgrades do not include Attachment Facilities, System Upgrade Facilities, or System Deliverability Upgrades. Distribution Upgrades are sole use facilities and shall not include Stand Alone System Upgrade Facilities, System Upgrade Facilities, or System Deliverability Upgrades.

4

SERVICE AGREEMENT NO. 2593

Effective Date shall mean the date on which this Agreement becomes effective upon execution by the Parties, subject to acceptance by the Commission, or if filed unexecuted, upon the date specified by the Commission.

Emergency State shall mean the condition or state that the New York State Power System is in when an abnormal condition occurs that requires automatic or immediate manual action to prevent or limit loss of the New York State Transmission System or Generators that could adversely affect the reliability of the New York State Power System.

Energy Resource Interconnection Service ("ERIS") shall mean the service provided by NYISO to interconnect the Developer's Large Generating Facility to the New York State Transmission System or to the Distribution System in accordance with the NYISO Minimum Interconnection Standard, to enable the New York State Transmission System to receive Energy and Ancillary Services from the Large Generating Facility, pursuant to the terms of the ISO OATT.

Environmental Law shall mean Applicable Laws and Regulations relating to pollution or protection of the environment or natural resources.

Federal Power Act shall mean the Federal Power Act, as amended, 16 U.S.C. §§ 791a *et seq.* ("FPA").

FERC shall mean the Federal Energy Regulatory Commission ("Commission") or its successor.

Force Majeure shall mean any act of God, labor disturbance, act of the public enemy, war, insurrection, riot, fire, storm or flood, explosion, breakage or accident to machinery or equipment, any order, regulation or restriction imposed by governmental, military or lawfully established civilian authorities, or any other cause beyond a Party's control. A Force Majeure event does not include acts of negligence or intentional wrongdoing by the Party claiming Force Majeure.

Generating Facility shall mean Developer's device for the production and/or storage for later injection of electricity identified in the Interconnection Request, but shall not include the Developer's Attachment Facilities or Distribution Upgrades.

Generating Facility Capacity shall mean the net seasonal capacity of the Generating Facility and the aggregate net seasonal capacity of the Generating Facility where it includes multiple energy production devices.

Good Utility Practice shall mean any of the practices, methods and acts engaged in or approved by a significant portion of the electric industry during the relevant time period, or any of the practices, methods and acts which, in the exercise of reasonable judgment in light of the facts known at the time the decision was made, could have been expected to accomplish the desired result at a reasonable cost consistent with good business practices, reliability, safety and expedition. Good Utility Practice is not intended to be limited to the optimum practice, method,

or act to the exclusion of all others, but rather to delineate acceptable practices, methods, or acts generally accepted in the region.

SERVICE AGREEMENT NO. 2593

Governmental Authority shall mean any federal, state, local or other governmental regulatory or administrative agency, court, commission, department, board, or other governmental subdivision, legislature, rulemaking board, tribunal, or other governmental authority having jurisdiction over any of the Parties, their respective facilities, or the respective services they provide, and exercising or entitled to exercise any administrative, executive, police, or taxing authority or power; provided, however, that such term does not include Developer, NYISO, Affected Transmission Owner, Connecting Transmission Owner, or any Affiliate thereof.

Hazardous Substances shall mean any chemicals, materials or substances defined as or included in the definition of "hazardous substances," "hazardous wastes," "hazardous materials," "hazardous constituents," "restricted hazardous materials," "extremely hazardous substances," "toxic substances," "radioactive substances," "contaminants," "pollutants," "toxic pollutants" or words of similar meaning and regulatory effect under any applicable Environmental Law, or any other chemical, material or substance, exposure to which is prohibited, limited or regulated by any applicable Environmental Law.

Highway shall mean 115 kV and higher transmission facilities that comprise the following NYCA interfaces: Dysinger East, West Central, Volney East, Moses South, Central East/Total East, and UPNY-ConEd, and their immediately connected, in series, bulk power system facilities in New York State. Each interface shall be evaluated to determine additional "in series" facilities, defined as any transmission facility higher than 115 kV that (a) is located in an upstream or downstream zone adjacent to the interface and (b) has a power transfer distribution factor (DFAX) equal to or greater than five percent when the aggregate of generation in zones or systems adjacent to the upstream zone or zones that define the interface is shifted to the aggregate of generation in zones or systems adjacent to the downstream zone or zones that define the interface. In determining "in series" facilities for Dysinger East and West Central interfaces, the 115 kV and 230 kV tie lines between NYCA and PJM located in LBMP Zones A and B shall not participate in the transfer. Highway transmission facilities are listed in ISO Procedures.

Initial Synchronization Date shall mean the date upon which the Large Generating Facility is initially synchronized and upon which Trial Operation begins, notice of which must be provided to the NYISO in the form of Appendix E-1.

In-Service Date shall mean the date upon which the Developer reasonably expects it will be ready to begin use of the Connecting Transmission Owner's Attachment Facilities to obtain back feed power.

Interconnection Facilities Study shall mean a study conducted by NYISO or a third party consultant for the Developer to determine a list of facilities (including Connecting Transmission Owner's Attachment Facilities, Distribution Upgrades, System Upgrade Facilities and System Deliverability Upgrades as identified in the Interconnection System Reliability Impact Study), the cost of those facilities, and the time required to interconnect the Large Generating Facility with the New York State Transmission System or with the Distribution System. The scope of the study is defined in Section 30.8 of the Standard Large Facility Interconnection Procedures.

6

SERVICE AGREEMENT NO. 2593

Interconnection Facilities Study Agreement ("Class Year Study Agreement") shall mean the form of agreement contained in Appendix 2 of the Standard Large Facility Interconnection Procedures for conducting the Interconnection Facilities Study.

Interconnection Request shall mean a Developer's request, in the form of Appendix 1 to the Standard Large Facility Interconnection Procedures, in accordance with the Tariff, to interconnect a new Large Generating Facility to the New York State Transmission System or to the Distribution System, or to materially increase the capacity of, or make a material modification to the operating characteristics of, an existing Large Generating Facility that is interconnected with the New York State Transmission System or with the Distribution System.

Interconnection Study shall mean any of the following studies: the Optional Interconnection Feasibility Study, the Interconnection System Reliability Impact Study, and the Interconnection Facilities Study described in the Standard Large Facility Interconnection Procedures.

Interconnection System Reliability Impact Study ("SRIS") shall mean an engineering study, conducted in accordance with Section 30.7 of the Standard Large Facility Interconnection Procedures, that evaluates the impact of the proposed Large Generating Facility on the safety and reliability of the New York State Transmission System and, if applicable, an Affected System, to determine what Attachment Facilities, Distribution Upgrades and System Upgrade Facilities are needed for the proposed Large Generating Facility of the Developer to connect reliably to the New York State Transmission System or to the Distribution System in a manner that meets the NYISO Minimum Interconnection Standard in Attachment X to the ISO OATT.

IRS shall mean the Internal Revenue Service.

Large Generating Facility shall mean a Generating Facility having a Generating Facility Capacity of more than 20 MW.

Material Modification shall mean those modifications that have a material impact on the cost or timing of any Interconnection Request with a later queue priority date.

Metering Equipment shall mean all metering equipment installed or to be installed at the Large Generating Facility pursuant to this Agreement at the metering points, including but not limited to instrument transformers, MWh-meters, data acquisition equipment, transducers, remote terminal unit, communications equipment, phone lines, and fiber optics.

NERC shall mean the North American Electric Reliability Council or its successor organization.

New York State Transmission System shall mean the entire New York State electric transmission system, which includes (i) the Transmission Facilities Under ISO Operational Control; (ii) the Transmission Facilities Requiring ISO Notification; and (iii) all remaining transmission facilities within the New York Control Area.

Notice of Dispute shall mean a written notice of a dispute or claim that arises out of or in connection with this Agreement or its performance.

NPCC shall mean the Northeast Power Coordinating Council or its successor organization.

SERVICE AGREEMENT NO. 2593

NYISO Deliverability Interconnection Standard - The standard that must be met, unless otherwise provided for by Attachment S to the ISO OATT, by (i) any generation facility larger than 2MW in order for that facility to obtain CRIS; (ii) any Class Year Transmission Project; (iii) any entity requesting External CRIS Rights, and (iv) any entity requesting a CRIS transfer pursuant to Section 25.9.5 of Attachment S to the ISO OATT. To meet the NYISO Deliverability Interconnection Standard, the Developer must, in accordance with the rules in Attachment S to the ISO OATT, fund or commit to fund any System Deliverability Upgrades identified for its project in the Class Year Deliverability Study.

NYISO Minimum Interconnection Standard - The reliability standard that must be met by any generation facility or Class Year Transmission Project that is subject to NYISO's Large Facility Interconnection Procedures in Attachment X to the ISO OATT or the NYISO's Small Generator Interconnection Procedures in Attachment Z, that is proposing to connect to the New York State Transmission System or Distribution System, to obtain ERIS. The Minimum Interconnection Standard is designed to ensure reliable access by the proposed project to the New York State Transmission System or to the Distribution System. The Minimum Interconnection Standard does not impose any deliverability test or deliverability requirement on the proposed interconnection.

NYSRC shall mean the New York State Reliability Council or its successor organization.

Other Interfaces shall mean the following interfaces into Capacity Regions: Lower Hudson Valley [*i.e.,* Rest of State (Load Zones A-F) to Lower Hudson Valley (Load Zones G, H and I)]; New York City [*i.e.,* Lower Hudson Valley (Load Zones G, H and I) to New York City (Load Zone J)]; and Long Island [*i.e.,* Lower Hudson Valley (Load Zones G, H and I) to Long Island (Load Zone K)], and the following Interfaces between the NYCA and adjacent Control Areas: PJM to NYISO, ISO-NE to NYISO, Hydro-Quebec to NYISO, and Norwalk Harbor (Connecticut) to Northport (Long Island) Cable.

Party or Parties shall mean NYISO, Connecting Transmission Owner, or Developer or any combination of the above.

Point of Change of Ownership shall mean the point, as set forth in Appendix A to this Agreement, where the Developer's Attachment Facilities connect to the Connecting Transmission Owner's Attachment Facilities.

Point of Interconnection shall mean the point, as set forth in Appendix A to this Agreement, where the Attachment Facilities connect to the New York State Transmission System or to the Distribution System.

Provisional Interconnection Service shall mean interconnection service provided by the ISO associated with interconnecting the Developer's Large Facility to the New York State Transmission System (or Distribution System as applicable) and enabling the transmission system to receive electric energy from the Large Facility at the Point of Interconnection, pursuant to the terms of the Provisional Large Facility Interconnection Agreement and, if applicable, the ISO OATT.

8

SERVICE AGREEMENT NO. 2593

Provisional Large Facility Interconnection Agreement shall mean the interconnection agreement for Provisional Interconnection Service established between the ISO, Connecting Transmission Owner(s) and the Developer. This agreement shall take the form of the Large Generator Interconnection Agreement, modified for provisional purposes and type of facility.

Reasonable Efforts shall mean, with respect to an action required to be attempted or taken by a Party under this Agreement, efforts that are timely and consistent with Good Utility Practice and are otherwise substantially equivalent to those a Party would use to protect its own interests.

Retired: A Generator that has permanently ceased operating on or after May 1, 2015 either: i) pursuant to applicable notice; or ii) as a result of the expiration of its Mothball Outage or its ICAP Ineligible Forced Outage.

Services Tariff shall mean the NYISO Market Administration and Control Area Tariff, as filed with the Commission, and as amended or supplemented from time to time, or any successor tariff thereto.

Stand Alone System Upgrade Facilities shall mean System Upgrade Facilities that are not part of an Affected System that a Developer may construct without affecting day-to-day operations of the New York State Transmission System during their construction. NYISO, the Connecting Transmission Owner and the Developer must agree as to what constitutes Stand Alone System Upgrade Facilities and identify them in Appendix A to this Agreement. If NYISO, the Connecting Transmission Owner and the Developer disagree about whether a particular System Upgrade Facility is a Stand Alone System Upgrade Facility, NYISO and the Connecting Transmission Owner must provide the Developer a written technical explanation outlining why NYISO and the Connecting Transmission Owner does not consider the System Upgrade Facility to be a Stand Alone System Upgrade Facility within fifteen (15) days of its determination.

Standard Large Facility Interconnection Procedures ("Large Facility Interconnection Procedures" or "LFIP") shall mean the interconnection procedures applicable to an Interconnection Request pertaining to a Large Generating Facility that are included in Attachment X of the ISO OATT.

Standard Large Generator Interconnection Agreement ("LGIA") shall mean this Agreement, which is the form of interconnection agreement applicable to an Interconnection Request pertaining to a Large Generating Facility, that is included in Appendix 4 to Attachment X of the ISO OATT.

System Deliverability Upgrades shall mean the least costly configuration of commercially available components of electrical equipment that can be used, consistent with Good Utility Practice and Applicable Reliability Requirements, to make the modifications or additions to Byways and Highways and Other Interfaces on the existing New York State Transmission System and Distribution System that are required for the proposed project to connect reliably to the system in a manner that meets the NYISO Deliverability Interconnection Standard at the requested level of Capacity Resource Interconnection Service.

9

SERVICE AGREEMENT NO. 2593

System Protection Facilities shall mean the equipment, including necessary protection signal communications equipment, required to (1) protect the New York State Transmission System from faults or other electrical disturbances occurring at the Large Generating Facility and (2) protect the Large Generating Facility from faults or other electrical system disturbances occurring on the New York State Transmission System or on other delivery systems or other generating systems to which the New York State Transmission System is directly connected.

System Upgrade Facilities shall mean the least costly configuration of commercially available components of electrical equipment that can be used, consistent with Good Utility Practice and Applicable Reliability Requirements, to make the modifications to the existing transmission system that are required to maintain system reliability due to: (i) changes in the system, including such changes as load growth and changes in load pattern, to be addressed in the form of generic generation or transmission projects; and (ii) proposed interconnections. In the case of proposed interconnection projects, System Upgrade Facilities are the modifications or additions to the existing New York State Transmission System that are required for the proposed project to connect reliably to the system in a manner that meets the NYISO Minimum Interconnection Standard.

Tariff shall mean the NYISO Open Access Transmission Tariff ("OATT"), as filed with the Commission, and as amended or supplemented from time to time, or any successor tariff.

Trial Operation shall mean the period during which Developer is engaged in on-site test operations and commissioning of the Large Generating Facility prior to Commercial Operation.

ARTICLE 2. EFFECTIVE DATE, TERM AND TERMINATION

2.1 Effective Date.

This Agreement shall become effective upon execution by the Parties, subject to acceptance by FERC, or if filed unexecuted, upon the date specified by FERC. The NYISO and Connecting Transmission Owner shall promptly file this Agreement with FERC upon execution in accordance with Article 3.

2.2 Term of Agreement.

Subject to the provisions of Article 2.3, this Agreement shall remain in effect for a period of twenty (20) years from the Effective Date and shall be automatically renewed for each successive one-year period thereafter.

2.3 Termination.

2.3.1 Written Notice.

This Agreement may be terminated by the Developer after giving the NYISO and

Connecting Transmission Owner ninety (90) Calendar Days advance written notice, or by the NYISO and Connecting Transmission Owner notifying FERC after the Large Generating Facility is Retired.

SERVICE AGREEMENT NO. 2593

2.3.2 Default.

Any Party may terminate this Agreement in accordance with Article 17.

2.3.3 Compliance.

Notwithstanding Articles 2.3.1 and 2.3.2, no termination of this Agreement shall become effective until the Parties have complied with all Applicable Laws and Regulations applicable to such termination, including the filing with FERC of a notice of termination of this Agreement, which notice has been accepted for filing by FERC.

2.4 Termination Costs.

If a Party elects to terminate this Agreement pursuant to Article 2.3.1 above, the terminating Party shall pay all costs incurred (including any cancellation costs relating to orders or contracts for Attachment Facilities and equipment) or charges assessed by the other Parties, as of the date of the other Parties' receipt of such notice of termination, that are the responsibility of the terminating Party under this Agreement. In the event of termination by a Party, all Parties shall use commercially Reasonable Efforts to mitigate the costs, damages and charges arising as a consequence of termination. Upon termination of this Agreement, unless otherwise ordered or approved by FERC:

2.4.1 With respect to any portion of the Connecting Transmission Owner's Attachment Facilities that have not yet been constructed or installed, the Connecting Transmission Owner shall to the extent possible and with Developer's authorization cancel any pending orders of, or return, any materials or equipment for, or contracts for construction of, such facilities; provided that in the event Developer elects not to authorize such cancellation, Developer shall assume all payment obligations with respect to such materials, equipment, and contracts, and the Connecting Transmission Owner shall deliver such material and equipment, and, if necessary, assign such contracts, to Developer as soon as practicable, at Developer's expense. To the extent that Developer has already paid Connecting Transmission Owner for any or all such costs of materials or equipment not taken by Developer, Connecting Transmission Owner shall promptly refund such amounts to Developer, less any costs, including penalties incurred by the Connecting Transmission Owner to cancel any pending orders of or return such materials, equipment, or contracts.

If Developer terminates this Agreement, it shall be responsible for all costs incurred in association with Developer's interconnection, including any cancellation costs relating to orders or contracts for Attachment Facilities and equipment, and other expenses including any System Upgrade Facilities and System Deliverability Upgrades for which the Connecting Transmission Owner has incurred expenses and has not been reimbursed by the Developer.

2.4.2 Connecting Transmission Owner may, at its option, retain any portion of such materials, equipment, or facilities that Developer chooses not to accept delivery of, in which case

SERVICE AGREEMENT NO. 2593

Connecting Transmission Owner shall be responsible for all costs associated with procuring such materials, equipment, or facilities.

2.4.3 With respect to any portion of the Attachment Facilities, and any other facilities already installed or constructed pursuant to the terms of this Agreement, Developer shall be responsible for all costs associated with the removal, relocation or other disposition or retirement of such materials, equipment, or facilities.

2.5 Disconnection.

Upon termination of this Agreement, Developer and Connecting Transmission Owner will take all appropriate steps to disconnect the Developer's Large Generating Facility from the New York State Transmission System. All costs required to effectuate such disconnection shall be borne by the terminating Party, unless such termination resulted from the non-terminating Party's Default of this Agreement or such non-terminating Party otherwise is responsible for these costs under this Agreement.

2.6 Survival.

This Agreement shall continue in effect after termination to the extent necessary to provide for final billings and payments and for costs incurred hereunder; including billings and payments pursuant to this Agreement; to permit the determination and enforcement of liability and indemnification obligations arising from acts or events that occurred while this Agreement was in effect; and to permit Developer and Connecting Transmission Owner each to have access to the lands of the other pursuant to this Agreement or other applicable agreements, to disconnect, remove or salvage its own facilities and equipment.

ARTICLE 3. REGULATORY FILINGS

NYISO and Connecting Transmission Owner shall file this Agreement (and any amendment hereto) with the appropriate Governmental Authority, if required. Any information related to studies for interconnection asserted by Developer to contain Confidential Information shall be treated in accordance with Article 22 of this Agreement and Attachment F to the ISO OATT. If the Developer has executed this Agreement, or any amendment thereto, the Developer shall reasonably cooperate with NYISO and Connecting Transmission Owner with respect to such filing and to provide any information reasonably requested by NYISO and Connecting Transmission Owner needed to comply with Applicable Laws and Regulations.

ARTICLE 4. SCOPE OF INTERCONNECTION SERVICE

4.1 Provision of Service.

NYISO will provide Developer with interconnection service of the following type for the term of this Agreement.

SERVICE AGREEMENT NO. 2593

4.1.1 Product.

NYISO will provide Energy Resource Interconnection Service and Capacity Resource Interconnection Services to Developer at the Point of Interconnection, subject to the requirements in Appendix A, Section 6 and in Appendix C, Section 2(c).

4.1.2 Developer is responsible for ensuring that its actual Large Generating Facility output matches the scheduled delivery from the Large Generating Facility to the New York State Transmission System, consistent with the scheduling requirements of the NYISO's FERC-approved market structure, including ramping into and out of such scheduled delivery, as measured at the Point of Interconnection, consistent with the scheduling requirements of the ISO OATT and any applicable FERC-approved market structure.

4.2 No Transmission Delivery Service.

The execution of this Agreement does not constitute a request for, nor agreement to provide, any Transmission Service under the ISO OATT, and does not convey any right to deliver electricity to any specific customer or Point of Delivery. If Developer wishes to obtain Transmission Service on the New York State Transmission System, then Developer must request such Transmission Service in accordance with the provisions of the ISO OATT.

4.3 No Other Services.

The execution of this Agreement does not constitute a request for, nor agreement to provide Energy, any Ancillary Services or Installed Capacity under the NYISO Market Administration and Control Area Services Tariff ("Services Tariff"). If Developer wishes to supply Energy, Installed Capacity or Ancillary Services, then Developer will make application to do so in accordance with the NYISO Services Tariff.

ARTICLE 5. INTERCONNECTION FACILITIES ENGINEERING, PROCUREMENT, AND CONSTRUCTION

5.1 Options.

Unless otherwise mutually agreed to by Developer and Connecting Transmission Owner, Developer shall select the In-Service Date, Initial Synchronization Date, and Commercial Operation Date; and either the Standard Option or Alternate Option set forth below, and such dates and selected option shall be set forth in Appendix B hereto. At the same time, Developer shall indicate whether it elects to exercise the Option to Build set forth in Article 5.1.3 below. If the dates designated by the Developer are not acceptable to the Connecting Transmission Owner, the Connecting Transmission Owner shall so notify the Developer within thirty (30) Calendar Days. Upon receipt of the notification that Developer's designated dates are not acceptable to the Connecting Transmission Owner, the Developer shall notify the Connecting Transmission Owner within thirty (30) Calendar Days whether it elects to exercise the Option to Build if it has not already elected to exercise the Option to Build.

SERVICE AGREEMENT NO. 2593

5.1.1 Standard Option.

The Connecting Transmission Owner shall design, procure, and construct the Connecting Transmission Owner's Attachment Facilities and System Upgrade Facilities and System Deliverability Upgrades, using Reasonable Efforts to complete the Connecting Transmission Owner's Attachment Facilities and System Upgrade Facilities and System Deliverability Upgrades by the dates set forth in Appendix B hereto. The Connecting Transmission Owner shall not be required to undertake any action which is inconsistent with its standard safety practices, its material and equipment specifications, its design criteria and construction procedures, its labor agreements, and Applicable Laws and Regulations. In the event the Connecting Transmission Owner reasonably expects that it will not be able to complete the Connecting Transmission Owner's Attachment Facilities and System Upgrade Facilities and System Deliverability Upgrades by the specified dates, the Connecting Transmission Owner shall promptly provide written notice to the Developer and NYISO, and shall undertake Reasonable Efforts to meet the earliest dates thereafter.

5.1.2 Alternate Option.

If the dates designated by Developer are acceptable to Connecting Transmission Owner, the Connecting Transmission Owner shall so notify Developer and NYISO within thirty (30) Calendar Days, and shall assume responsibility for the design, procurement and construction of the Connecting Transmission Owner's Attachment Facilities by the designated dates. If Connecting Transmission Owner subsequently fails to complete Connecting Transmission Owner's Attachment Facilities by the In-Service Date, to the extent necessary to provide back feed power; or fails to complete System Upgrade Facilities or System Deliverability Upgrades by the Initial Synchronization Date to the extent necessary to allow for Trial Operation at full power output, unless other arrangements are made by the Developer and Connecting Transmission Owner for such Trial Operation; or fails to complete the System Upgrade Facilities and System Deliverability Upgrades by the Commercial Operation Date, as such dates are reflected in Appendix B hereto; Connecting Transmission Owner shall pay Developer liquidated damages in accordance with Article 5.3, Liquidated Damages, provided, however, the dates designated by Developer shall be extended day for day for each day that NYISO refuses to grant clearances to install equipment.

5.1.3 Option to Build.

Developer shall have the option to assume responsibility for the design, procurement and construction of Connecting Transmission Owner's Attachment Facilities and Stand Alone System Upgrade Facilities on the dates specified in Article 5.1.2; provided that if an Attachment Facility or Stand Alone System Upgrade Facility is needed for more than one Developer's project, Developer's option to build such facility shall be contingent on the agreement of all other affected Developers. NYISO, Connecting Transmission Owner and Developer must agree as to what constitutes Stand Alone System Upgrade Facilities and identify such Stand Alone System Upgrade Facilities in Appendix A hereto. Except for Stand Alone System Upgrade

Facilities, Developer shall have no right to construct System Upgrade Facilities under this option.

SERVICE AGREEMENT NO. 2593

5.1.4 Negotiated Option.

If the dates designated by Developer are not acceptable to the Connecting Transmission Owner, the Developer and Connecting Transmission Owner shall in good faith attempt to negotiate terms and conditions (including revision of the specified dates and liquidated damages, the provision of incentives or the procurement and construction of all facilities other than the Connecting Transmission Owner's Attachment Facilities and Stand Alone System Upgrade Facilities if the Developer elects to exercise the Option to Build under Article 5.1.3. If the two Parties are unable to reach agreement on such terms and conditions, then, pursuant to Article 5.1.1 (Standard Option), Connecting Transmission Owner shall assume responsibility for the design, procurement and construction of all facilities other than the Connecting Transmission Owner's Attachment Facilities and Stand Alone System Upgrade Facilities if the Developer elects to exercise the Option to Build.

5.2 General Conditions Applicable to Option to Build.

If Developer assumes responsibility for the design, procurement and construction of the Connecting Transmission Owner's Attachment Facilities and Stand Alone System Upgrade Facilities, the following conditions apply:

5.2.1 Developer shall engineer, procure equipment, and construct the Connecting Transmission Owner's Attachment Facilities and Stand Alone System Upgrade Facilities (or portions thereof) using Good Utility Practice and using standards and specifications provided in advance by the Connecting Transmission Owner;

5.2.2 Developer's engineering, procurement and construction of the Connecting Transmission Owner's Attachment Facilities and Stand Alone System Upgrade Facilities shall comply with all requirements of law to which Connecting Transmission Owner would be subject in the engineering, procurement or construction of the Connecting Transmission Owner's Attachment Facilities and Stand Alone System Upgrade Facilities;

5.2.3 Connecting Transmission Owner shall review and approve the engineering design, equipment acceptance tests, and the construction of the Connecting Transmission Owner's Attachment Facilities and Stand Alone System Upgrade Facilities;

5.2.4 Prior to commencement of construction, Developer shall provide to Connecting Transmission Owner and NYISO a schedule for construction of the Connecting Transmission Owner's Attachment Facilities and Stand Alone System Upgrade Facilities, and shall promptly respond to requests for information from Connecting Transmission Owner or NYISO;

5.2.5 At any time during construction, Connecting Transmission Owner shall have the right to gain unrestricted access to the Connecting Transmission Owner's Attachment Facilities and Stand Alone System Upgrade Facilities and to conduct inspections of the same;

15

SERVICE AGREEMENT NO. 2593

5.2.6 At any time during construction, should any phase of the engineering, equipment procurement, or construction of the Connecting Transmission Owner's Attachment Facilities and Stand Alone System Upgrade Facilities not meet the standards and specifications provided by Connecting Transmission Owner, the Developer shall be obligated to remedy deficiencies in that portion of the Connecting Transmission Owner's Attachment Facilities and Stand Alone System Upgrade Facilities;

5.2.7 Developer shall indemnify Connecting Transmission Owner and NYISO for claims arising from the Developer's construction of Connecting Transmission Owner's Attachment Facilities and Stand Alone System Upgrade Facilities under procedures applicable to Article 18.1 Indemnity;

5.2.8 Developer shall transfer control of Connecting Transmission Owner's Attachment Facilities and Stand Alone System Upgrade Facilities to the Connecting Transmission Owner;

5.2.9 Unless the Developer and Connecting Transmission Owner otherwise agree, Developer shall transfer ownership of Connecting Transmission Owner's Attachment Facilities and Stand Alone System Upgrade Facilities to Connecting Transmission Owner;

5.2.10 Connecting Transmission Owner shall approve and accept for operation and maintenance the Connecting Transmission Owner's Attachment Facilities and Stand Alone System Upgrade Facilities to the extent engineered, procured, and constructed in accordance with this Article 5.2; and

5.2.11 Developer shall deliver to NYISO and Connecting Transmission Owner "as built" drawings, information, and any other documents that are reasonably required by NYISO or Connecting Transmission Owner to assure that the Attachment Facilities and Stand Alone System Upgrade Facilities are built to the standards and specifications required by Connecting Transmission Owner.

5.2.12 If Developer exercises the Option to Build pursuant to Article 5.1.3, the Developer shall pay the Connecting Transmission Owner the agreed upon amount of $341,800 for the Connecting Transmission Owner to execute the responsibilities enumerated to Connecting Transmission Owner under Article 5.2. The Connecting Transmission Owner shall invoice Developer for this total amount to be divided on a monthly basis pursuant to Article 12.

5.3 Liquidated Damages.

The actual damages to the Developer, in the event the Connecting Transmission Owner's Attachment Facilities or System Upgrade Facilities or System Deliverability Upgrades are not completed by the dates designated by the Developer and accepted by the Connecting Transmission Owner pursuant to subparagraphs 5.1.2 or 5.1.4, above, may include Developer's fixed operation and maintenance costs and lost opportunity costs. Such actual damages are uncertain and impossible to determine at this time. Because of such uncertainty, any liquidated

damages paid by the Connecting Transmission Owner to the Developer in the event that Connecting Transmission Owner does not complete any portion of the Connecting Transmission

SERVICE AGREEMENT NO. 2593

Owner's Attachment Facilities, System Upgrade Facilities or System Deliverability Upgrades by the applicable dates, shall be an amount equal to 1/2 of 1 percent per day of the actual cost of the Connecting Transmission Owner's Attachment Facilities and System Upgrade Facilities and System Deliverability Upgrades, in the aggregate, for which Connecting Transmission Owner has assumed responsibility to design, procure and construct.

However, in no event shall the total liquidated damages exceed 20 percent of the actual cost of the Connecting Transmission Owner Attachment Facilities and System Upgrade Facilities and System Deliverability Upgrades for which the Connecting Transmission Owner has assumed responsibility to design, procure, and construct. The foregoing payments will be made by the Connecting Transmission Owner to the Developer as just compensation for the damages caused to the Developer, which actual damages are uncertain and impossible to determine at this time, and as reasonable liquidated damages, but not as a penalty or a method to secure performance of this Agreement. Liquidated damages, when the Developer and Connecting Transmission Owner agree to them, are the exclusive remedy for the Connecting Transmission Owner's failure to meet its schedule.

Further, Connecting Transmission Owner shall not pay liquidated damages to Developer if: (1) Developer is not ready to commence use of the Connecting Transmission Owner's Attachment Facilities or System Upgrade Facilities or System Deliverability Upgrades to take the delivery of power for the Developer's Large Generating Facility's Trial Operation or to export power from the Developer's Large Generating Facility on the specified dates, unless the Developer would have been able to commence use of the Connecting Transmission Owner's Attachment Facilities or System Upgrade Facilities or System Deliverability Upgrades to take the delivery of power for Developer's Large Generating Facility's Trial Operation or to export power from the Developer's Large Generating Facility, but for Connecting Transmission Owner's delay; (2) the Connecting Transmission Owner's failure to meet the specified dates is the result of the action or inaction of the Developer or any other Developer who has entered into a Standard Large Generator Interconnection Agreement with the Connecting Transmission Owner and NYISO, or action or inaction by any other Party, or any other cause beyond Connecting Transmission Owner's reasonable control or reasonable ability to cure; (3) the Developer has assumed responsibility for the design, procurement and construction of the Connecting Transmission Owner's Attachment Facilities and Stand Alone System Upgrade Facilities; or (4) the Connecting Transmission Owner and Developer have otherwise agreed. In no event shall NYISO have any liability whatever to Developer for liquidated damages associated with the engineering, procurement or construction of Attachment Facilities or System Upgrade Facilities or System Deliverability Upgrades.

5.4 Power System Stabilizers.

The Developer shall procure, install, maintain and operate Power System Stabilizers in accordance with the requirements identified in the Interconnection Studies conducted for Developer's Large Generating Facility. NYISO and Connecting Transmission Owner reserve the right to reasonably establish minimum acceptable settings for any installed Power System

Stabilizers, subject to the design and operating limitations of the Large Generating Facility. If the Large Generating Facility's Power System Stabilizers are removed from service or not

capable of automatic operation, the Developer shall immediately notify the Connecting Transmission Owner and NYISO. The requirements of this paragraph shall not apply to wind generators.

5.5 Equipment Procurement.

If responsibility for construction of the Connecting Transmission Owner's Attachment Facilities or System Upgrade Facilities or System Deliverability Upgrades is to be borne by the Connecting Transmission Owner, then the Connecting Transmission Owner shall commence design of the Connecting Transmission Owner's Attachment Facilities or System Upgrade Facilities or System Deliverability Upgrades and procure necessary equipment as soon as practicable after all of the following conditions are satisfied, unless the Developer and Connecting Transmission Owner otherwise agree in writing:

5.5.1 NYISO and Connecting Transmission Owner have completed the Interconnection Facilities Study pursuant to the Interconnection Facilities Study Agreement;

5.5.2 The NYISO has completed the required cost allocation analyses, and Developer has accepted its share of the costs for necessary System Upgrade Facilities and System Deliverability Upgrades in accordance with the provisions of Attachment S of the ISO OATT;

5.5.3 The Connecting Transmission Owner has received written authorization to proceed with design and procurement from the Developer by the date specified in Appendix B hereto; and

5.5.4 The Developer has provided security to the Connecting Transmission Owner in accordance with Article 11.5 by the dates specified in Appendix B hereto.

5.6 Construction Commencement.

The Connecting Transmission Owner shall commence construction of the Connecting Transmission Owner's Attachment Facilities and System Upgrade Facilities and System Deliverability Upgrades for which it is responsible as soon as practicable after the following additional conditions are satisfied:

5.6.1 Approval of the appropriate Governmental Authority has been obtained for any facilities requiring regulatory approval;

5.6.2 Necessary real property rights and rights-of-way have been obtained, to the extent required for the construction of a discrete aspect of the Connecting Transmission Owner's Attachment Facilities and System Upgrade Facilities and System Deliverability Upgrades;

5.6.3 The Connecting Transmission Owner has received written authorization to proceed with construction from the Developer by the date specified in Appendix B hereto; and

5.6.4 The Developer has provided security to the Connecting Transmission Owner in accordance with Article 11.5 by the dates specified in Appendix B hereto.

SERVICE AGREEMENT NO. 2593

5.7 Work Progress.

The Developer and Connecting Transmission Owner will keep each other, and NYISO, advised periodically as to the progress of their respective design, procurement and construction efforts. Any Party may, at any time, request a progress report from the Developer or Connecting Transmission Owner. If, at any time, the Developer determines that the completion of the Connecting Transmission Owner's Attachment Facilities will not be required until after the specified In-Service Date, the Developer will provide written notice to the Connecting Transmission Owner and NYISO of such later date upon which the completion of the Connecting Transmission Owner's Attachment Facilities will be required.

5.8 Information Exchange.

As soon as reasonably practicable after the Effective Date, the Developer and Connecting Transmission Owner shall exchange information, and provide NYISO the same information, regarding the design and compatibility of their respective Attachment Facilities and compatibility of the Attachment Facilities with the New York State Transmission System, and shall work diligently and in good faith to make any necessary design changes.

5.9 Other Interconnection Options

5.9.1 Limited Operation.

If any of the Connecting Transmission Owner's Attachment Facilities or System Upgrade Facilities or System Deliverability Upgrades are not reasonably expected to be completed prior to the Commercial Operation Date of the Developer's Large Generating Facility, NYISO shall, upon the request and at the expense of Developer, in conjunction with the Connecting Transmission Owner, perform operating studies on a timely basis to determine the extent to which the Developer's Large Generating Facility and the Developer's Attachment Facilities may operate prior to the completion of the Connecting Transmission Owner's Attachment Facilities or System Upgrade Facilities or System Deliverability Upgrades consistent with Applicable Laws and Regulations, Applicable Reliability Standards, Good Utility Practice, and this Agreement. Connecting Transmission Owner and NYISO shall permit Developer to operate the Developer's Large Generating Facility and the Developer's Attachment Facilities in accordance with the results of such studies.

5.9.2 Provisional Interconnection Service.

Prior to the completion of the Large Facility Interconnection Procedures and prior to completion of requisite Attachment Facilities, Distribution Upgrades, System Upgrade Facilities, System Distribution Upgrades, or System Protection Facilities, the Developer may request an evaluation for Provisional Interconnection Service. NYISO, in conjunction with the Connecting Transmission Owner, shall determine, through available studies or additional studies as necessary, whether stability, short circuit, thermal, and/or voltage issues would arise if the Developer interconnects without modifications to the Large Generating Facility or the New York

State Transmission System (or Distribution System as applicable). NYISO, in conjunction with the Connecting Transmission Owner, shall determine whether any Attachment Facilities,

SERVICE AGREEMENT NO. 2593

Distribution Upgrades, System Upgrade Facilities, System Deliverability Upgrades, or System Protection Facilities, which are necessary to meet Applicable Laws and Regulations, Applicable Reliability Standards, and Good Utility Practice, are in place prior to the commencement of interconnection service from the Large Facility. Where available studies indicate that the Attachment Facilities, Distribution Upgrades, System Upgrade Facilities, System Deliverability Upgrades, or System Protection Facilities are required for the interconnection of a new, modified and/or expanded Large Facility but such facilities are not currently in place, NYISO, in conjunction with the Connecting Transmission Owner, will perform a study, at the Developer's expense, to confirm the facilities that are required for Provisional Interconnection Service. The maximum permissible output of the Large Facility in the Provisional Large Facility Interconnection Agreement shall be studied, at the Developer's expense, and updated annually. The NYISO shall issue the study's findings in writing to the Developer and Connecting Transmission Owner(s). Following a determination by NYISO, in conjunction with the Connecting Transmission Owner, that the Developer may reliably provide Provisional Interconnection Service, NYISO shall tender to the Developer and Connecting Transmission Owner, a Provisional Large Facility Interconnection Agreement. NYISO, Developer, and Connecting Transmission Owner may execute the Provisional Large Facility Interconnection Agreement, or the Developer may request the filing of an unexecuted Provisional Large Facility Interconnection Agreement with the Commission. The Developer shall assume all risk and liabilities with respect to changes between the Provisional Large Facility Interconnection Agreement and the Large Generator Interconnection Agreement, including changes in output limits and the cost responsibilities for the Attachment Facilities, System Upgrade Facilities, System Deliverability Upgrades, and/or System Protection Facilities.

5.10 Developer's Attachment Facilities ("DAF").

Developer shall, at its expense, design, procure, construct, own and install the DAF, as set forth in Appendix A hereto.

5.10.1 DAF Specifications.

Developer shall submit initial specifications for the DAF, including System Protection Facilities, to Connecting Transmission Owner and NYISO at least one hundred eighty (180) Calendar Days prior to the Initial Synchronization Date; and final specifications for review and comment at least ninety (90) Calendar Days prior to the Initial Synchronization Date. Connecting Transmission Owner and NYISO shall review such specifications to ensure that the DAF are compatible with the technical specifications, operational control, and safety requirements of the Connecting Transmission Owner and NYISO and comment on such specifications within thirty (30) Calendar Days of Developer's submission. All specifications provided hereunder shall be deemed to be Confidential Information.

5.10.2 No Warranty.

The review of Developer's final specifications by Connecting Transmission Owner and NYISO shall not be construed as confirming, endorsing, or providing a warranty as to the design, fitness, safety, durability or reliability of the Large Generating Facility, or the DAF. Developer

shall make such changes to the DAF as may reasonably be required by Connecting Transmission Owner or NYISO, in accordance with Good Utility Practice, to ensure that the DAF are compatible with the technical specifications, operational control, and safety requirements of the Connecting Transmission Owner and NYISO.

5.10.3 DAF Construction.

The DAF shall be designed and constructed in accordance with Good Utility Practice. Within one hundred twenty (120) Calendar Days after the Commercial Operation Date, unless the Developer and Connecting Transmission Owner agree on another mutually acceptable deadline, the Developer shall deliver to the Connecting Transmission Owner and NYISO "as-built" drawings, information and documents for the DAF, such as: a one-line diagram, a site plan showing the Large Generating Facility and the DAF, plan and elevation drawings showing the layout of the DAF, a relay functional diagram, relaying AC and DC schematic wiring diagrams and relay settings for all facilities associated with the Developer's step-up transformers, the facilities connecting the Large Generating Facility to the step-up transformers and the DAF, and the impedances (determined by factory tests) for the associated step-up transformers and the Large Generating Facility. The Developer shall provide to, and coordinate with, Connecting Transmission Owner and NYISO with respect to proposed specifications for the excitation system, automatic voltage regulator, Large Generating Facility control and protection settings, transformer tap settings, and communications, if applicable.

5.11 Connecting Transmission Owner's Attachment Facilities Construction.

The Connecting Transmission Owner's Attachment Facilities shall be designed and constructed in accordance with Good Utility Practice. Upon request, within one hundred twenty (120) Calendar Days after the Commercial Operation Date, unless the Connecting Transmission Owner and Developer agree on another mutually acceptable deadline, the Connecting Transmission Owner shall deliver to the Developer "as-built" drawings, relay diagrams, information and documents for the Connecting Transmission Owner's Attachment Facilities set forth in Appendix A.

The Connecting Transmission Owner shall not transfer operational control of the Connecting Transmission Owner's Attachment Facilities and Stand Alone System Upgrade Facilities to the NYISO upon completion of such facilities.

5.12 Access Rights.

Upon reasonable notice and supervision by the Granting Party, and subject to any required or necessary regulatory approvals, either the Connecting Transmission Owner or Developer ("Granting Party") shall furnish to the other of those two Parties ("Access Party") at no cost any rights of use, licenses, rights of way and easements with respect to lands owned or controlled by the Granting Party, its agents (if allowed under the applicable agency agreement), or any Affiliate, that are necessary to enable the Access Party to obtain ingress and egress at the Point of Interconnection to construct, operate, maintain, repair, test (or witness testing), inspect,

replace or remove facilities and equipment to: (i) interconnect the Large Generating Facility with the New York State Transmission System; (ii) operate and maintain the Large Generating

Facility, the Attachment Facilities and the New York State Transmission System; and (iii) disconnect or remove the Access Party's facilities and equipment upon termination of this Agreement. In exercising such licenses, rights of way and easements, the Access Party shall not unreasonably disrupt or interfere with normal operation of the Granting Party's business and shall adhere to the safety rules and procedures established in advance, as may be changed from time to time, by the Granting Party and provided to the Access Party. The Access Party shall indemnify the Granting Party against all claims of injury or damage from third parties resulting from the exercise of the access rights provided for herein.

5.13 Lands of Other Property Owners.

If any part of the Connecting Transmission Owner's Attachment Facilities and/or System Upgrade Facilities and/or System Deliverability Upgrades is to be installed on property owned by persons other than Developer or Connecting Transmission Owner, the Connecting Transmission Owner shall at Developer's expense use efforts, similar in nature and extent to those that it typically undertakes for its own or affiliated generation, including use of its eminent domain authority, and to the extent consistent with state law, to procure from such persons any rights of use, licenses, rights of way and easements that are necessary to construct, operate, maintain, test, inspect, replace or remove the Connecting Transmission Owner's Attachment Facilities and/or System Upgrade Facilities and/or System Deliverability Upgrades upon such property.

5.14 Permits.

NYISO, Connecting Transmission Owner and the Developer shall cooperate with each other in good faith in obtaining all permits, licenses and authorizations that are necessary to accomplish the interconnection in compliance with Applicable Laws and Regulations. With respect to this paragraph, Connecting Transmission Owner shall provide permitting assistance to the Developer comparable to that provided to the Connecting Transmission Owner's own, or an Affiliate's generation, if any.

5.15 Early Construction of Base Case Facilities.

Developer may request Connecting Transmission Owner to construct, and Connecting Transmission Owner shall construct, subject to a binding cost allocation agreement reached in accordance with Attachment S to the ISO OATT, including Section 25.8.7 thereof, using Reasonable Efforts to accommodate Developer's In-Service Date, all or any portion of any System Upgrade Facilities or System Deliverability Upgrades required for Developer to be interconnected to the New York State Transmission System which are included in the Base Case of the Class Year Study for the Developer, and which also are required to be constructed for another Developer, but where such construction is not scheduled to be completed in time to achieve Developer's In-Service Date.

5.16 Suspension.

Developer reserves the right, upon written notice to Connecting Transmission Owner and NYISO, to suspend at any time all work by Connecting Transmission Owner associated with the

construction and installation of Connecting Transmission Owner's Attachment Facilities and/or System Upgrade Facilities and/or System Deliverability Upgrades required for only that Developer under this Agreement with the condition that the New York State Transmission System shall be left in a safe and reliable condition in accordance with Good Utility Practice and the safety and reliability criteria of Connecting Transmission Owner and NYISO. In such event, Developer shall be responsible for all reasonable and necessary costs and/or obligations in accordance with Attachment S to the ISO OATT including those which Connecting Transmission Owner (i) has incurred pursuant to this Agreement prior to the suspension and (ii) incurs in suspending such work, including any costs incurred to perform such work as may be necessary to ensure the safety of persons and property and the integrity of the New York State Transmission System during such suspension and, if applicable, any costs incurred in connection with the cancellation or suspension of material, equipment and labor contracts which Connecting Transmission Owner cannot reasonably avoid; provided, however, that prior to canceling or suspending any such material, equipment or labor contract, Connecting Transmission Owner shall obtain Developer's authorization to do so.

Connecting Transmission Owner shall invoice Developer for such costs pursuant to Article 12 and shall use due diligence to minimize its costs. In the event Developer suspends work by Connecting Transmission Owner required under this Agreement pursuant to this Article 5.16, and has not requested Connecting Transmission Owner to recommence the work required under this Agreement on or before the expiration of three (3) years following commencement of such suspension, this Agreement shall be deemed terminated. The three-year period shall begin on the date the suspension is requested, or the date of the written notice to Connecting Transmission Owner and NYISO, if no effective date is specified.

5.17 Taxes.

5.17.1 Developer Payments Not Taxable.

The Developer and Connecting Transmission Owner intend that all payments or property transfers made by Developer to Connecting Transmission Owner for the installation of the Connecting Transmission Owner's Attachment Facilities and the System Upgrade Facilities and the System Deliverability Upgrades shall be non-taxable, either as contributions to capital, or as an advance, in accordance with the Internal Revenue Code and any applicable state income tax laws and shall not be taxable as contributions in aid of construction or otherwise under the Internal Revenue Code and any applicable state income tax laws.

5.17.2 Representations and Covenants.

In accordance with IRS Notice 2001-82 and IRS Notice 88-129, Developer represents and covenants that (i) ownership of the electricity generated at the Large Generating Facility will pass to another party prior to the transmission of the electricity on the New York State Transmission System, (ii) for income tax purposes, the amount of any payments and the cost of any property transferred to the Connecting Transmission Owner for the Connecting

Transmission Owner's Attachment Facilities will be capitalized by Developer as an intangible asset and recovered using the straight-line method over a useful life of twenty (20) years, and

(iii) any portion of the Connecting Transmission Owner's Attachment Facilities that is a "dualuse intertie," within the meaning of IRS Notice 88-129, is reasonably expected to carry only a de minimis amount of electricity in the direction of the Large Generating Facility. For this purpose, "de minimis amount" means no more than 5 percent of the total power flows in both directions, calculated in accordance with the "5 percent test" set forth in IRS Notice 88-129. This is not intended to be an exclusive list of the relevant conditions that must be met to conform to IRS requirements for non-taxable treatment.

At Connecting Transmission Owner's request, Developer shall provide Connecting Transmission Owner with a report from an independent engineer confirming its representation in clause (iii), above. Connecting Transmission Owner represents and covenants that the cost of the Connecting Transmission Owner's Attachment Facilities paid for by Developer will have no net effect on the base upon which rates are determined.

5.17.3 Indemnification for the Cost Consequences of Current Tax Liability Imposed Upon the Connecting Transmission Owner.

Notwithstanding Article 5.17.1, Developer shall protect, indemnify and hold harmless Connecting Transmission Owner from the cost consequences of any current tax liability imposed against Connecting Transmission Owner as the result of payments or property transfers made by Developer to Connecting Transmission Owner under this Agreement, as well as any interest and penalties, other than interest and penalties attributable to any delay caused by Connecting Transmission Owner.

Connecting Transmission Owner shall not include a gross-up for the cost consequences of any current tax liability in the amounts it charges Developer under this Agreement unless (i) Connecting Transmission Owner has determined, in good faith, that the payments or property transfers made by Developer to Connecting Transmission Owner should be reported as income subject to taxation or (ii) any Governmental Authority directs Connecting Transmission Owner to report payments or property as income subject to taxation; provided, however, that Connecting Transmission Owner may require Developer to provide security, in a form reasonably acceptable to Connecting Transmission Owner (such as a parental guarantee or a letter of credit), in an amount equal to the cost consequences of any current tax liability under this Article 5.17. Developer shall reimburse Connecting Transmission Owner for such costs on a fully grossed-up basis, in accordance with Article 5.17.4, within thirty (30) Calendar Days of receiving written notification from Connecting Transmission Owner of the amount due, including detail about how the amount was calculated.

This indemnification obligation shall terminate at the earlier of (1) the expiration of the ten-year testing period and the applicable statute of limitation, as it may be extended by the Connecting Transmission Owner upon request of the IRS, to keep these years open for audit or adjustment, or (2) the occurrence of a subsequent taxable event and the payment of any related indemnification obligations as contemplated by this Article 5.17.

SERVICE AGREEMENT NO. 2593

5.17.4 Tax Gross-Up Amount.

Developer's liability for the cost consequences of any current tax liability under this Article 5.17 shall be calculated on a fully grossed-up basis. Except as may otherwise be agreed to by the parties, this means that Developer will pay Connecting Transmission Owner, in addition to the amount paid for the Attachment Facilities and System Upgrade Facilities and System Deliverability Upgrades, an amount equal to (1) the current taxes imposed on Connecting Transmission Owner ("Current Taxes") on the excess of (a) the gross income realized by Connecting Transmission Owner as a result of payments or property transfers made by Developer to Connecting Transmission Owner under this Agreement (without regard to any payments under this Article 5.17) (the "Gross Income Amount") over (b) the present value of future tax deductions for depreciation that will be available as a result of such payments or property transfers (the "Present Value Depreciation Amount"), plus (2) an additional amount sufficient to permit the Connecting Transmission Owner to receive and retain, after the payment of all Current Taxes, an amount equal to the net amount described in clause (1).

For this purpose, (i) Current Taxes shall be computed based on Connecting Transmission Owner's composite federal and state tax rates at the time the payments or property transfers are received and Connecting Transmission Owner will be treated as being subject to tax at the highest marginal rates in effect at that time (the "Current Tax Rate"), and (ii) the Present Value Depreciation Amount shall be computed by discounting Connecting Transmission Owner's anticipated tax depreciation deductions as a result of such payments or property transfers by Connecting Transmission Owner's current weighted average cost of capital. Thus, the formula for calculating Developer's liability to Connecting Transmission Owner pursuant to this Article 5.17.4 can be expressed as follows: (Current Tax Rate x (Gross Income Amount - Present Value Depreciation Amount))/(1 - Current Tax Rate). Developer's estimated tax liability in the event taxes are imposed shall be stated in Appendix A, Attachment Facilities and System Upgrade Facilities and System Deliverability Upgrades.

5.17.5 Private Letter Ruling or Change or Clarification of Law.

At Developer's request and expense, Connecting Transmission Owner shall file with the IRS a request for a private letter ruling as to whether any property transferred or sums paid, or to be paid, by Developer to Connecting Transmission Owner under this Agreement are subject to federal income taxation. Developer will prepare the initial draft of the request for a private letter ruling, and will certify under penalties of perjury that all facts represented in such request are true and accurate to the best of Developer's knowledge. Connecting Transmission Owner and Developer shall cooperate in good faith with respect to the submission of such request.

Connecting Transmission Owner shall keep Developer fully informed of the status of such request for a private letter ruling and shall execute either a privacy act waiver or a limited power of attorney, in a form acceptable to the IRS, that authorizes Developer to participate in all discussions with the IRS regarding such request for a private letter ruling. Connecting Transmission Owner shall allow Developer to attend all meetings with IRS officials about the

request and shall permit Developer to prepare the initial drafts of any follow-up letters in connection with the request.

SERVICE AGREEMENT NO. 2593

5.17.6 Subsequent Taxable Events.

If, within 10 years from the date on which the relevant Connecting Transmission Owner Attachment Facilities are placed in service, (i) Developer Breaches the covenants contained in Article 5.17.2, (ii) a "disqualification event" occurs within the meaning of IRS Notice 88-129, or (iii) this Agreement terminates and Connecting Transmission Owner retains ownership of the Attachment Facilities and System Upgrade Facilities and System Deliverability Upgrades, the Developer shall pay a tax gross-up for the cost consequences of any current tax liability imposed on Connecting Transmission Owner, calculated using the methodology described in Article 5.17.4 and in accordance with IRS Notice 90-60.

5.17.7 Contests.

In the event any Governmental Authority determines that Connecting Transmission Owner's receipt of payments or property constitutes income that is subject to taxation, Connecting Transmission Owner shall notify Developer, in writing, within thirty (30) Calendar Days of receiving notification of such determination by a Governmental Authority. Upon the timely written request by Developer and at Developer's sole expense, Connecting Transmission Owner may appeal, protest, seek abatement of, or otherwise oppose such determination. Upon Developer's written request and sole expense, Connecting Transmission Owner may file a claim for refund with respect to any taxes paid under this Article 5.17, whether or not it has received such a determination. Connecting Transmission Owner reserves the right to make all decisions with regard to the prosecution of such appeal, protest, abatement or other contest, including the selection of counsel and compromise or settlement of the claim, but Connecting Transmission Owner shall keep Developer informed, shall consider in good faith suggestions from Developer about the conduct of the contest, and shall reasonably permit Developer or an Developer representative to attend contest proceedings.

Developer shall pay to Connecting Transmission Owner on a periodic basis, as invoiced by Connecting Transmission Owner, Connecting Transmission Owner's documented reasonable costs of prosecuting such appeal, protest, abatement or other contest, including any costs associated with obtaining the opinion of independent tax counsel described in this Article 5.17.7. The Connecting Transmission Owner may abandon any contest if the Developer fails to provide payment to the Connecting Transmission Owner within thirty (30) Calendar Days of receiving such invoice. At any time during the contest, Connecting Transmission Owner may agree to a settlement either with Developer's consent or after obtaining written advice from nationally-recognized tax counsel, selected by Connecting Transmission Owner, but reasonably acceptable to Developer, that the proposed settlement represents a reasonable settlement given the hazards of litigation. Developer's obligation shall be based on the amount of the settlement agreed to by Developer, or if a higher amount, so much of the settlement that is supported by the written advice from nationally-recognized tax counsel selected under the terms of the preceding sentence. The settlement amount shall be calculated on a fully grossed-up basis to cover any related cost consequences of the current tax liability. The Connecting Transmission Owner may

also settle any tax controversy without receiving the Developer's consent or any such written advice; however, any such settlement will relieve the Developer from any obligation to

indemnify Connecting Transmission Owner for the tax at issue in the contest (unless the failure to obtain written advice is attributable to the Developer's unreasonable refusal to the appointment of independent tax counsel).

5.17.8 Refund.

In the event that (a) a private letter ruling is issued to Connecting Transmission Owner which holds that any amount paid or the value of any property transferred by Developer to Connecting Transmission Owner under the terms of this Agreement is not subject to federal income taxation, (b) any legislative change or administrative announcement, notice, ruling or other determination makes it reasonably clear to Connecting Transmission Owner in good faith that any amount paid or the value of any property transferred by Developer to Connecting Transmission Owner under the terms of this Agreement is not taxable to Connecting Transmission Owner, (c) any abatement, appeal, protest, or other contest results in a determination that any payments or transfers made by Developer to Connecting Transmission Owner are not subject to federal income tax, or (d) if Connecting Transmission Owner receives a refund from any taxing authority for any overpayment of tax attributable to any payment or property transfer made by Developer to Connecting Transmission Owner pursuant to this Agreement, Connecting Transmission Owner shall promptly refund to Developer the following:

(i) Any payment made by Developer under this Article 5.17 for taxes that is attributable to the amount determined to be non-taxable, together with interest thereon,

(ii) Interest on any amounts paid by Developer to Connecting Transmission Owner for such taxes which Connecting Transmission Owner did not submit to the taxing authority, calculated in accordance with the methodology set forth in FERC's regulations at 18 C.F.R. §35.19a(a)(2)(iii) from the date payment was made by Developer to the date Connecting Transmission Owner refunds such payment to Developer, and

(iii) With respect to any such taxes paid by Connecting Transmission Owner, any refund or credit Connecting Transmission Owner receives or to which it may be entitled from any Governmental Authority, interest (or that portion thereof attributable to the payment described in clause (i), above) owed to the Connecting Transmission Owner for such overpayment of taxes (including any reduction in interest otherwise payable by Connecting Transmission Owner to any Governmental Authority resulting from an offset or credit); provided, however, that Connecting Transmission Owner will remit such amount promptly to Developer only after and to the extent that Connecting Transmission Owner has received a tax refund, credit or offset from any Governmental Authority for any applicable overpayment of income tax related to the Connecting Transmission Owner's Attachment Facilities.

The intent of this provision is to leave both the Developer and Connecting Transmission Owner, to the extent practicable, in the event that no taxes are due with respect to any payment for Attachment Facilities and System Upgrade Facilities and System Deliverability Upgrades hereunder, in the same position they would have been in had no such tax payments been made.

SERVICE AGREEMENT NO. 2593

5.17.9 Taxes Other Than Income Taxes.

Upon the timely request by Developer, and at Developer's sole expense, Connecting Transmission Owner shall appeal, protest, seek abatement of, or otherwise contest any tax (other than federal or state income tax) asserted or assessed against Connecting Transmission Owner for which Developer may be required to reimburse Connecting Transmission Owner under the terms of this Agreement. Developer shall pay to Connecting Transmission Owner on a periodic basis, as invoiced by Connecting Transmission Owner, Connecting Transmission Owner's documented reasonable costs of prosecuting such appeal, protest, abatement, or other contest. Developer and Connecting Transmission Owner shall cooperate in good faith with respect to any such contest. Unless the payment of such taxes is a prerequisite to an appeal or abatement or cannot be deferred, no amount shall be payable by Developer to Connecting Transmission Owner for such taxes until they are assessed by a final, non-appealable order by any court or agency of competent jurisdiction. In the event that a tax payment is withheld and ultimately due and payable after appeal, Developer will be responsible for all taxes, interest and penalties, other than penalties attributable to any delay caused by Connecting Transmission Owner.

5.18 Tax Status; Non-Jurisdictional Entities.

5.18.1 Tax Status.

Each Party shall cooperate with the other Parties to maintain the other Parties' tax status. Nothing in this Agreement is intended to adversely affect the tax status of any Party including the status of NYISO, or the status of any Connecting Transmission Owner with respect to the issuance of bonds including, but not limited to, Local Furnishing Bonds. Notwithstanding any other provisions of this Agreement, LIPA, NYPA and Consolidated Edison Company of New York, Inc. shall not be required to comply with any provisions of this Agreement that would result in the loss of tax-exempt status of any of their Tax-Exempt Bonds or impair their ability to issue future tax-exempt obligations. For purposes of this provision, Tax-Exempt Bonds shall include the obligations of the Long Island Power Authority, NYPA and Consolidated Edison Company of New York, Inc., the interest on which is not included in gross income under the Internal Revenue Code.

5.18.2 Non-Jurisdictional Entities.

LIPA and NYPA do not waive their exemptions, pursuant to Section 201(f) of the FPA, from Commission jurisdiction with respect to the Commission's exercise of the FPA's general ratemaking authority.

5.19 Modification.

5.19.1 General.

Either the Developer or Connecting Transmission Owner may undertake modifications to its facilities covered by this Agreement. If either the Developer or Connecting Transmission Owner

plans to undertake a modification that reasonably may be expected to affect the other Party's facilities, that Party shall provide to the other Party, and to NYISO, sufficient

information regarding such modification so that the other Party and NYISO may evaluate the potential impact of such modification prior to commencement of the work. Such information shall be deemed to be Confidential Information hereunder and shall include information concerning the timing of such modifications and whether such modifications are expected to interrupt the flow of electricity from the Large Generating Facility. The Party desiring to perform such work shall provide the relevant drawings, plans, and specifications to the other Party and NYISO at least ninety (90) Calendar Days in advance of the commencement of the work or such shorter period upon which the Parties may agree, which agreement shall not unreasonably be withheld, conditioned or delayed.

In the case of Large Generating Facility modifications that do not require Developer to submit an Interconnection Request, the NYISO shall provide, within sixty (60) Calendar Days (or such other time as the Parties may agree), an estimate of any additional modifications to the New York State Transmission System, Connecting Transmission Owner's Attachment Facilities or System Upgrade Facilities or System Deliverability Upgrades necessitated by such Developer modification and a good faith estimate of the costs thereof. The Developer shall be responsible for the cost of any such additional modifications, including the cost of studying the impact of the Developer modification.

5.19.2 Standards.

Any additions, modifications, or replacements made to a Party's facilities shall be designed, constructed and operated in accordance with this Agreement, NYISO requirements and Good Utility Practice.

5.19.3 Modification Costs.

Developer shall not be assigned the costs of any additions, modifications, or replacements that Connecting Transmission Owner makes to the Connecting Transmission Owner's Attachment Facilities or the New York State Transmission System to facilitate the interconnection of a third party to the Connecting Transmission Owner's Attachment Facilities or the New York State Transmission System, or to provide Transmission Service to a third party under the ISO OATT, except in accordance with the cost allocation procedures in Attachment S of the ISO OATT. Developer shall be responsible for the costs of any additions, modifications, or replacements to the Developer's Attachment Facilities that may be necessary to maintain or upgrade such Developer's Attachment Facilities consistent with Applicable Laws and Regulations, Applicable Reliability Standards or Good Utility Practice.

ARTICLE 6. TESTING AND INSPECTION

6.1 Pre-Commercial Operation Date Testing and Modifications.

Prior to the Commercial Operation Date, the Connecting Transmission Owner shall test the Connecting Transmission Owner's Attachment Facilities (including required control technologies and protection systems) and System Upgrade Facilities and System Deliverability

Upgrades and Developer shall test the Large Generating Facility and the Developer's Attachment Facilities to ensure their safe and reliable operation. Similar testing may be required after initial

operation. Developer and Connecting Transmission Owner shall each make any modifications to its facilities that are found to be necessary as a result of such testing. Developer shall bear the cost of all such testing and modifications. Developer shall generate test energy at the Large Generating Facility only if it has arranged for the injection of such test energy in accordance with NYISO procedures.

6.2 Post-Commercial Operation Date Testing and Modifications.

Developer and Connecting Transmission Owner shall each at its own expense perform routine inspection and testing of its facilities and equipment in accordance with Good Utility Practice and Applicable Reliability Standards as may be necessary to ensure the continued interconnection of the Large Generating Facility with the New York State Transmission System in a safe and reliable manner. Developer and Connecting Transmission Owner shall each have the right, upon advance written notice, to require reasonable additional testing of the other Party's facilities, at the requesting Party's expense, as may be in accordance with Good Utility Practice.

6.3 Right to Observe Testing.

Developer and Connecting Transmission Owner shall each notify the other Party, and the NYISO, in advance of its performance of tests of its Attachment Facilities. The other Party, and the NYISO, shall each have the right, at its own expense, to observe such testing.

6.4 Right to Inspect.

Developer and Connecting Transmission Owner shall each have the right, but shall have no obligation to: (i) observe the other Party's tests and/or inspection of any of its System Protection Facilities and other protective equipment, including Power System Stabilizers; (ii) review the settings of the other Party's System Protection Facilities and other protective equipment; and (iii) review the other Party's maintenance records relative to the Attachment Facilities, the System Protection Facilities and other protective equipment. NYISO shall have these same rights of inspection as to the facilities and equipment of Developer and Connecting Transmission Owner. A Party may exercise these rights from time to time as it deems necessary upon reasonable notice to the other Party. The exercise or non-exercise by a Party of any such rights shall not be construed as an endorsement or confirmation of any element or condition of the Attachment Facilities or the System Protection Facilities or other protective equipment or the operation thereof, or as a warranty as to the fitness, safety, desirability, or reliability of same. Any information that a Party obtains through the exercise of any of its rights under this Article 6.4 shall be treated in accordance with Article 22 of this Agreement and Attachment F to the ISO OATT.

ARTICLE 7. METERING

7.1 General.

Developer and Connecting Transmission Owner shall each comply with applicable requirements of NYISO and the New York Public Service Commission when exercising its

rights and fulfilling its responsibilities under this Article 7. Unless otherwise agreed by the Connecting Transmission Owner and NYISO approved meter service provider and Developer, the Connecting Transmission Owner shall install Metering Equipment at the Point of Interconnection prior to any operation of the Large Generating Facility and shall own, operate, test and maintain such Metering Equipment. Net power flows including MW and MVAR, MWHR and loss profile data to and from the Large Generating Facility shall be measured at the Point of Interconnection. Connecting Transmission Owner shall provide metering quantities, in analog and/or digital form, as required, to Developer or NYISO upon request. Where the Point of Interconnection for the Large Generating Facility is other than the generator terminal, the Developer shall also provide gross MW and MVAR quantities at the generator terminal. Developer shall bear all reasonable documented costs associated with the purchase, installation, operation, testing and maintenance of the Metering Equipment.

7.2 Check Meters.

Developer, at its option and expense, may install and operate, on its premises and on its side of the Point of Interconnection, one or more check meters to check Connecting Transmission Owner's meters. Such check meters shall be for check purposes only and shall not be used for the measurement of power flows for purposes of this Agreement, except as provided in Article 7.4 below. The check meters shall be subject at all reasonable times to inspection and examination by Connecting Transmission Owner or its designee. The installation, operation and maintenance thereof shall be performed entirely by Developer in accordance with Good Utility Practice.

7.3 Standards.

Connecting Transmission Owner shall install, calibrate, and test revenue quality Metering Equipment including potential transformers and current transformers in accordance with applicable ANSI and PSC standards as detailed in the NYISO Control Center Communications Manual and in the NYISO Revenue Metering Requirements Manual.

7.4 Testing of Metering Equipment.

Connecting Transmission Owner shall inspect and test all of its Metering Equipment upon installation and at least once every two (2) years thereafter. If requested to do so by NYISO or Developer, Connecting Transmission Owner shall, at Developer's expense, inspect or test Metering Equipment more frequently than every two (2) years. Connecting Transmission Owner shall give reasonable notice of the time when any inspection or test shall take place, and Developer and NYISO may have representatives present at the test or inspection. If at any time Metering Equipment is found to be inaccurate or defective, it shall be adjusted, repaired or replaced at Developer's expense, in order to provide accurate metering, unless the inaccuracy or defect is due to Connecting Transmission Owner's failure to maintain, then Connecting Transmission Owner shall pay. If Metering Equipment fails to register, or if the measurement made by Metering Equipment during a test varies by more than two percent from the measurement made by the standard meter used in the test, Connecting Transmission Owner shall

adjust the measurements by correcting all measurements for the period during which Metering Equipment was in error by using Developer's check meters, if installed. If no such check meters

are installed or if the period cannot be reasonably ascertained, the adjustment shall be for the period immediately preceding the test of the Metering Equipment equal to one-half the time from the date of the last previous test of the Metering Equipment. The NYISO shall reserve the right to review all associated metering equipment installation on the Developer's or Connecting Transmission Owner's property at any time.

7.5 Metering Data.

At Developer's expense, the metered data shall be telemetered to one or more locations designated by Connecting Transmission Owner, Developer and NYISO. Such telemetered data shall be used, under normal operating conditions, as the official measurement of the amount of energy delivered from the Large Generating Facility to the Point of Interconnection.

ARTICLE 8. COMMUNICATIONS

8.1 Developer Obligations.

In accordance with applicable NYISO requirements, Developer shall maintain satisfactory operating communications with Connecting Transmission Owner and NYISO. Developer shall provide standard voice line, dedicated voice line and facsimile communications at its Large Generating Facility control room or central dispatch facility through use of either the public telephone system, or a voice communications system that does not rely on the public telephone system. Developer shall also provide the dedicated data circuit(s) necessary to provide Developer data to Connecting Transmission Owner and NYISO as set forth in Appendix D hereto. The data circuit(s) shall extend from the Large Generating Facility to the location(s) specified by Connecting Transmission Owner and NYISO. Any required maintenance of such communications equipment shall be performed by Developer. Operational communications shall be activated and maintained under, but not be limited to, the following events: system paralleling or separation, scheduled and unscheduled shutdowns, equipment clearances, and hourly and daily load data.

8.2 Remote Terminal Unit.

Prior to the Initial Synchronization Date of the Large Generating Facility, a Remote Terminal Unit, or equivalent data collection and transfer equipment acceptable to the Parties, shall be installed by Developer, or by Connecting Transmission Owner at Developer's expense, to gather accumulated and instantaneous data to be telemetered to the location(s) designated by Connecting Transmission Owner and NYISO through use of a dedicated point-to-point data circuit(s) as indicated in Article 8.1. The communication protocol for the data circuit(s) shall be specified by Connecting Transmission Owner and NYISO. Instantaneous bi-directional analog real power and reactive power flow information must be telemetered directly to the location(s) specified by Connecting Transmission Owner and NYISO.

Each Party will promptly advise the appropriate other Party if it detects or otherwise learns of any metering, telemetry or communications equipment errors or malfunctions that

require the attention and/or correction by that other Party. The Party owning such equipment shall correct such error or malfunction as soon as reasonably feasible.

SERVICE AGREEMENT NO. 2593

8.3 No Annexation.

Any and all equipment placed on the premises of a Party shall be and remain the property of the Party providing such equipment regardless of the mode and manner of annexation or attachment to real property, unless otherwise mutually agreed by the Party providing such equipment and the Party receiving such equipment.

ARTICLE 9. OPERATIONS

9.1 General.

Each Party shall comply with Applicable Laws and Regulations and Applicable Reliability Standards. Each Party shall provide to the other Parties all information that may reasonably be required by the other Parties to comply with Applicable Laws and Regulations and Applicable Reliability Standards.

9.2 NYISO and Connecting Transmission Owner Obligations.

Connecting Transmission Owner and NYISO shall cause the New York State Transmission System and the Connecting Transmission Owner's Attachment Facilities to be operated, maintained and controlled in a safe and reliable manner in accordance with this Agreement and the NYISO Tariffs. Connecting Transmission Owner and NYISO may provide operating instructions to Developer consistent with this Agreement, NYISO procedures and Connecting Transmission Owner's operating protocols and procedures as they may change from time to time. Connecting Transmission Owner and NYISO will consider changes to their respective operating protocols and procedures proposed by Developer.

9.3 Developer Obligations.

Developer shall at its own expense operate, maintain and control the Large Generating Facility and the Developer's Attachment Facilities in a safe and reliable manner and in accordance with this Agreement. Developer shall operate the Large Generating Facility and the Developer's Attachment Facilities in accordance with NYISO and Connecting Transmission Owner requirements, as such requirements are set forth or referenced in Appendix C hereto. Appendix C will be modified to reflect changes to the requirements as they may change from time to time. Any Party may request that the appropriate other Party or Parties provide copies of the requirements set forth or referenced in Appendix C hereto.

9.4 Start-Up and Synchronization.

Consistent with the mutually acceptable procedures of the Developer and Connecting Transmission Owner, the Developer is responsible for the proper synchronization of the Large Generating Facility to the New York State Transmission System in accordance with NYISO and Connecting Transmission Owner procedures and requirements.

SERVICE AGREEMENT NO. 2593

9.5 Real and Reactive Power Control and Primary Frequency Response.

9.5.1 Power Factor Design Criteria.

9.5.1.1 Synchronous Generation. Developer shall design the Large Generating Facility to maintain effective composite power delivery at continuous rated power output at the Point of Interconnection at a power factor within the range of 0.95 leading to 0.95 lagging unless the NYISO or the Transmission Owner in whose Transmission District the Large Generating Facility interconnects has established different requirements that apply to all generators in the New York Control Area or Transmission District (as applicable) on a comparable basis, in accordance with Good Utility Practice.

The Developer shall design and maintain the plant auxiliary systems to operate safely throughout the entire real and reactive power design range.

9.5.1.2 Non-Synchronous Generation. Developer shall design the Large Generating Facility to maintain composite power delivery at continuous rated power output at the high-side of the generator substation at a power factor within the range of 0.95 leading to 0.95 lagging, unless the NYISO or the Transmission Owner in whose Transmission District the Large Generating Facility interconnects has established a different power factor range that applies to all non-synchronous generators in the Control Area or Transmission District (as applicable) on a comparable basis, in accordance with Good Utility Practice. This power factor range standard shall be dynamic and can be met using, for example, power electronics designed to supply this level of reactive capability (taking into account any limitations due to voltage level, real power output, etc.) or fixed and switched capacitors, or a combination of the two. This requirement shall only apply to newly interconnection non-synchronous generators that have not yet executed a Facilities Study Agreement as of September 21, 2016.

The Developer shall design and maintain the plant auxiliary systems to operate safely throughout the entire real and reactive power design range.

9.5.2 Voltage Schedules.

Once the Developer has synchronized the Large Generating Facility with the New York State Transmission System, NYISO shall require Developer to operate the Large Generating Facility to produce or absorb reactive power within the design capability of the Large Generating Facility set forth in Article 9.5.1 (Power Factor Design Criteria). NYISO's voltage schedules shall treat all sources of reactive power in the New York Control Area in an equitable and not unduly discriminatory manner. NYISO shall exercise Reasonable Efforts to provide Developer with such schedules in accordance with NYISO procedures, and may make changes to such schedules as necessary to maintain the reliability of the New York State Transmission System. Developer shall operate the Large Generating Facility to maintain the specified output voltage or power factor at the Point of Interconnection within the design capability of the Large Generating Facility set forth in Article 9.5.1 (Power Factor Design Criteria) as directed by the Connecting

Transmission Owner's system operator or the NYISO. If Developer is unable to maintain the specified voltage or power factor, it shall promptly notify NYISO.

SERVICE AGREEMENT NO. 2593

9.5.3 Payment for Reactive Power.

NYISO shall pay Developer for reactive power or voltage support service that Developer provides from the Large Generating Facility in accordance with the provisions of Rate Schedule 2 of the NYISO Services Tariff.

9.5.4 Voltage Regulators.

Whenever the Large Generating Facility is operated in parallel with the New York State Transmission System, the automatic voltage regulators shall be in automatic operation at all times. If the Large Generating Facility's automatic voltage regulators are not capable of such automatic operation, the Developer shall immediately notify NYISO, or its designated representative, and ensure that such Large Generating Facility's real and reactive power are within the design capability of the Large Generating Facility's generating unit(s) and steady state stability limits and NYISO system operating (thermal, voltage and transient stability) limits. Developer shall not cause its Large Generating Facility to disconnect automatically or instantaneously from the New York State Transmission System or trip any generating unit comprising the Large Generating Facility for an under or over frequency condition unless the abnormal frequency condition persists for a time period beyond the limits set forth in ANSI/IEEE Standard C37.106, or such other standard as applied to other generators in the New York Control Area on a comparable basis.

9.5.5 Primary Frequency Response.

Developer shall ensure the primary frequency response capability of its Large Generating Facility by installing, maintaining, and operating a functioning governor or equivalent controls. The term "functioning governor or equivalent controls" as used herein shall mean the required hardware and/or software that provides frequency responsive real power control with the ability to sense changes in system frequency and autonomously adjust the Large Generating Facility's real power output in accordance with the droop and deadband parameters and in the direction needed to correct frequency deviations. Developer is required to install a governor or equivalent controls with the capability of operating: (1) with a maximum 5 percent droop ± 0.036 Hz deadband; or (2) in accordance with the relevant droop, deadband, and timely and sustained response settings from an approved Applicable Reliability Standard providing for equivalent or more stringent parameters. The droop characteristic shall be: (1) based on the nameplate capacity of the Large Generating Facility, and shall be linear in the range of frequencies between 59 and 61 Hz that are outside of the deadband parameter; or (2) based on an approved Applicable Reliability Standard providing for an equivalent or more stringent parameter. The deadband parameter shall be: the range of frequencies above and below nominal (60 Hz) in which the governor or equivalent controls is not expected to adjust the Large Generating Facility's real power output in response to frequency deviations. The deadband shall be implemented: (1) without a step to the droop curve, that is, once the frequency deviation exceeds the deadband parameter, the expected change in the Large Generating Facility's real power output in response

to frequency deviations shall start from zero and then increase (for under-frequency deviations) or decrease (for over-frequency deviations) linearly in proportion to the magnitude of the

frequency deviation; or (2) in accordance with an approved Applicable Reliability Standard providing for an equivalent or more stringent parameter. Developer shall notify NYISO that the primary frequency response capability of the Large Generating Facility has been tested and confirmed during commissioning. Once Developer has synchronized the Large Generating Facility with the New York State Transmission System, Developer shall operate the Large Generating Facility consistent with the provisions specified in Articles 9.5.5.1 and 9.5.5.2 of this Agreement. The primary frequency response requirements contained herein shall apply to both synchronous and non-synchronous Large Generating Facilities.

9.5.5.1 Governor or Equivalent Controls.

Whenever the Large Generating Facility is operated in parallel with the New York State Transmission System, Developer shall operate the Large Generating Facility with its governor or equivalent controls in service and responsive to frequency. Developer shall: (1) in coordination with NYISO, set the deadband parameter to: (1) a maximum of ±0.036 Hz and set the droop parameter to a maximum of 5 percent; or (2) implement the relevant droop and deadband settings from an approved Applicable Reliability Standard that provides for equivalent or more stringent parameters. Developer shall be required to provide the status and settings of the governor and equivalent controls to NYISO and/or the Connecting Transmission Owner upon request. If Developer needs to operate the Large Generating Facility with its governor or equivalent controls not in service, Developer shall immediately notify NYISO and the Connecting Transmission Owner, and provide both with the following information: (1) the operating status of the governor or equivalent controls (i.e., whether it is currently out of service or when it will be taken out of service); (2) the reasons for removing the governor or equivalent controls from service; and (3) a reasonable estimate of when the governor or equivalent controls will be returned to service. Developer shall make Reasonable Efforts to return its governor or equivalent controls into service as soon as practicable. Developer shall make Reasonable Efforts to keep outages of the Large Generating Facility's governor or equivalent controls to a minimum whenever the Large Generating Facility is operated in parallel with the New York State Transmission System.

9.5.5.2 Timely and Sustained Response.

Developer shall ensure that the Large Generating Facility's real power response to sustained frequency deviations outside of the deadband setting is automatically provided and shall begin immediately after frequency deviates outside of the deadband, and to the extent the Large Generating Facility has operating capability in the direction needed to correct the frequency deviation. Developer shall not block or otherwise inhibit the ability of the governor or equivalent controls to respond and shall ensure that the response is not inhibited, except under certain operational constraints including, but not limited to, ambient temperature limitations, physical energy limitations, outages of mechanical equipment, or regulatory requirements. The Large Generating Facility shall sustain the real power response at least until system frequency returns to a value within the deadband setting of the governor or equivalent controls. An Applicable Reliability Standard with equivalent or more stringent requirements shall supersede the above requirements.

9.5.5.3 Exemptions.

SERVICE AGREEMENT NO. 2593

Large Generating Facilities that are regulated by the United States Nuclear Regulatory Commission shall be exempt from Articles 9.5.5, 9.5.5.1, and 9.5.5.2 of this Agreement. Large Generating Facilities that are behind the meter generation that is sized-to-load (i.e., the thermal load and the generation are near-balanced in real-time operation and the generation is primarily controlled to maintain the unique thermal, chemical, or mechanical output necessary for the operating requirements of its host facility) shall be required to install primary frequency response capability requirements in accordance with the droop and deadband capability requirements specified in Article 9.5.5, but shall be otherwise exempt from the operating requirements in Articles 9.5.5, 9.5.5.1, 9.5.5.2, and 9.5.5.4 of this Agreement.

9.5.5.4 Electric Storage Resources.

Developer interconnecting an electric storage resource shall establish an operating range in Appendix C of its LGIA that specifies a minimum state of charge and a maximum state of charge between which the electric storage resource will be required to provide primary frequency response consistent with the conditions set forth in Articles 9.5.5, 9.5.5.1, 9.5.5.2, and 9.5.5.3 of this Agreement. Appendix C shall specify whether the operating range is static or dynamic, and shall consider (1) the expected magnitude of frequency deviations in the interconnection; (2) the expected duration that system frequency will remain outside of the deadband parameter in the interconnection; (3) the expected incidence of frequency deviations outside of the deadband parameter in the interconnection; (4) the physical capabilities of the electric storage resource; (5) operational limitations of the electric storage resources due to manufacturer specification; and (6) any other relevant factors agreed to by the NYISO, Connecting Transmission Owner, and Developer. If the operating range is dynamic, then Appendix C must establish how frequently the operating range will be reevaluated and the factors that may be considered during its reevaluation.

Developer's electric storage resource is required to provide timely and sustained primary frequency response consistent with Article 9.5.5.2 of this Agreement when it is online and dispatched to inject electricity to the New York State Transmission System and/or receive electricity from the New York State Transmission System. This excludes circumstances when the electric storage resource is not dispatched to inject electricity to the New York State Transmission System and/or dispatched to receive electricity from the New York State Transmission System. If Developer's electric storage resource is charging at the time of a frequency deviation outside of its deadband parameter, it is to increase (for over-frequency deviations) or decrease (for under-frequency deviations) the rate at which it is charging in accordance with its droop parameter. Developer's electric storage resource is not required to change from charging to discharging, or vice versa, unless the response necessitated by the droop and deadband settings requires it to do so and it is technically capable of making such a transition.

9.6 Outages and Interruptions.

9.6.1 Outages.

9.6.1.1 Outage Authority and Coordination.

SERVICE AGREEMENT NO. 2593

Developer and Connecting Transmission Owner may each, in accordance with NYISO procedures and Good Utility Practice and in coordination with the other Party, remove from service any of its respective Attachment Facilities or System Upgrade Facilities and System Deliverability Upgrades that may impact the other Party's facilities as necessary to perform maintenance or testing or to install or replace equipment. Absent an Emergency State, the Party scheduling a removal of such facility(ies) from service will use Reasonable Efforts to schedule such removal on a date and time mutually acceptable to both the Developer and the Connecting Transmission Owner. In all circumstances either Party planning to remove such facility(ies) from service shall use Reasonable Efforts to minimize the effect on the other Party of such removal.

9.6.1.2 Outage Schedules.

The Connecting Transmission Owner shall post scheduled outages of its transmission facilities on the NYISO OASIS. Developer shall submit its planned maintenance schedules for the Large Generating Facility to Connecting Transmission Owner and NYISO for a minimum of a rolling thirty-six month period. Developer shall update its planned maintenance schedules as necessary. NYISO may direct, or the Connecting Transmission Owner may request, Developer to reschedule its maintenance as necessary to maintain the reliability of the New York State Transmission System. Compensation to Developer for any additional direct costs that the Developer incurs as a result of rescheduling maintenance, including any additional overtime, breaking of maintenance contracts or other costs above and beyond the cost the Developer would have incurred absent the request to reschedule maintenance, shall be in accordance with the ISO OATT. Developer will not be eligible to receive compensation, if during the twelve (12) months prior to the date of the scheduled maintenance, the Developer had modified its schedule of maintenance activities other than at the direction of the NYISO or request of the Connecting Transmission Owner.

9.6.1.3 Outage Restoration.

If an outage on the Attachment Facilities or System Upgrade Facilities or System Deliverability Upgrades of the Connecting Transmission Owner or Developer adversely affects the other Party's operations or facilities, the Party that owns the facility that is out of service shall use Reasonable Efforts to promptly restore such facility(ies) to a normal operating condition consistent with the nature of the outage. The Party that owns the facility that is out of service shall provide the other Party and NYISO, to the extent such information is known, information on the nature of the Emergency State, an estimated time of restoration, and any corrective actions required. Initial verbal notice shall be followed up as soon as practicable with written notice explaining the nature of the outage.

9.6.2 Interruption of Service. If required by Good Utility Practice or Applicable Reliability Standards to do so, the NYISO or Connecting Transmission Owner may require Developer to interrupt or reduce production of electricity if such production of electricity could adversely affect the ability of NYISO and Connecting Transmission Owner to perform such activities as are necessary to safely and reliably operate and maintain the New York State

SERVICE AGREEMENT NO. 2593

Transmission System. The following provisions shall apply to any interruption or reduction permitted under this Article 9.6.2:

9.6.2.1 The interruption or reduction shall continue only for so long as reasonably necessary under Good Utility Practice;

9.6.2.2 Any such interruption or reduction shall be made on an equitable, nondiscriminatory basis with respect to all generating facilities directly connected to the New York State Transmission System;

9.6.2.3 When the interruption or reduction must be made under circumstances which do not allow for advance notice, NYISO or Connecting Transmission Owner shall notify Developer by telephone as soon as practicable of the reasons for the curtailment, interruption, or reduction, and, if known, its expected duration. Telephone notification shall be followed by written notification as soon as practicable;

9.6.2.4 Except during the existence of an Emergency State, when the interruption or reduction can be scheduled without advance notice, NYISO or Connecting Transmission Owner shall notify Developer in advance regarding the timing of such scheduling and further notify Developer of the expected duration. NYISO or Connecting Transmission Owner shall coordinate with each other and the Developer using Good Utility Practice to schedule the interruption or reduction during periods of least impact to the Developer, the Connecting Transmission Owner and the New York State Transmission System;

9.6.2.5 The Parties shall cooperate and coordinate with each other to the extent necessary in order to restore the Large Generating Facility, Attachment Facilities, and the New York State Transmission System to their normal operating state, consistent with system conditions and Good Utility Practice.

9.6.3 Under-Frequency and Over Frequency Conditions.

The New York State Transmission System is designed to automatically activate a load-shed program as required by the NPCC in the event of an under-frequency system disturbance. Developer shall implement under-frequency and over-frequency relay set points for the Large Generating Facility as required by the NPCC to ensure "ride through" capability of the New York State Transmission System. Large Generating Facility response to frequency deviations of predetermined magnitudes, both under-frequency and over-frequency deviations, shall be studied and coordinated with the NYISO and Connecting Transmission Owner in accordance with Good Utility Practice. The term "ride through" as used herein shall mean the ability of a Generating Facility to stay connected to and synchronized with the New York State Transmission System during system disturbances within a range of under-frequency and over-frequency conditions, in accordance with Good Utility Practice and with NPCC Regional Reliability Reference Directory # 12, or its successor.

SERVICE AGREEMENT NO. 2593

9.6.4 System Protection and Other Control Requirements.

9.6.4.1 System Protection Facilities. Developer shall, at its expense, install, operate and maintain System Protection Facilities as a part of the Large Generating Facility or Developer's Attachment Facilities. Connecting Transmission Owner shall install at Developer's expense any System Protection Facilities that may be required on the Connecting Transmission Owner's Attachment Facilities or the New York State Transmission System as a result of the interconnection of the Large Generating Facility and Developer's Attachment Facilities.

9.6.4.2 The protection facilities of both the Developer and Connecting Transmission Owner shall be designed and coordinated with other systems in accordance with Good Utility Practice and Applicable Reliability Standards.

9.6.4.3 The Developer and Connecting Transmission Owner shall each be responsible for protection of its respective facilities consistent with Good Utility Practice and Applicable Reliability Standards.

9.6.4.4 The protective relay design of the Developer and Connecting Transmission Owner shall each incorporate the necessary test switches to perform the tests required in Article 6 of this Agreement. The required test switches will be placed such that they allow operation of lockout relays while preventing breaker failure schemes from operating and causing unnecessary breaker operations and/or the tripping of the Developer's Large Generating Facility.

9.6.4.5 The Developer and Connecting Transmission Owner will each test, operate and maintain System Protection Facilities in accordance with Good Utility Practice, NERC and NPCC criteria.

9.6.4.6 Prior to the In-Service Date, and again prior to the Commercial Operation Date, the Developer and Connecting Transmission Owner shall each perform, or their agents shall perform, a complete calibration test and functional trip test of the System Protection Facilities. At intervals suggested by Good Utility Practice and following any apparent malfunction of the System Protection Facilities, the Developer and Connecting Transmission Owner shall each perform both calibration and functional trip tests of its System Protection Facilities. These tests do not require the tripping of any in-service generation unit. These tests do, however, require that all protective relays and lockout contacts be activated.

9.6.5 Requirements for Protection.

In compliance with NPCC requirements and Good Utility Practice, Developer shall provide, install, own, and maintain relays, circuit breakers and all other devices necessary to remove any fault contribution of the Large Generating Facility to any short circuit occurring on the New York State Transmission System not otherwise isolated by Connecting Transmission Owner's equipment, such that the removal of the fault contribution shall be coordinated with the

protective requirements of the New York State Transmission System. Such protective equipment shall include, without limitation, a disconnecting device or switch with load-

interrupting capability located between the Large Generating Facility and the New York State Transmission System at a site selected upon mutual agreement (not to be unreasonably withheld, conditioned or delayed) of the Developer and Connecting Transmission Owner. Developer shall be responsible for protection of the Large Generating Facility and Developer's other equipment from such conditions as negative sequence currents, over- or under-frequency, sudden load rejection, over- or under-voltage, and generator loss-of-field. Developer shall be solely responsible to disconnect the Large Generating Facility and Developer's other equipment if conditions on the New York State Transmission System could adversely affect the Large Generating Facility.

9.6.6 Power Quality.

Neither the facilities of Developer nor the facilities of Connecting Transmission Owner shall cause excessive voltage flicker nor introduce excessive distortion to the sinusoidal voltage or current waves as defined by ANSI Standard C84.1-1989, in accordance with IEEE Standard 519, or any applicable superseding electric industry standard. In the event of a conflict between ANSI Standard C84.1-1989, or any applicable superseding electric industry standard, ANSI Standard C84.1-1989, or the applicable superseding electric industry standard, shall control.

9.7 Switching and Tagging Rules.

The Developer and Connecting Transmission Owner shall each provide the other Party a copy of its switching and tagging rules that are applicable to the other Party's activities. Such switching and tagging rules shall be developed on a nondiscriminatory basis. The Parties shall comply with applicable switching and tagging rules, as amended from time to time, in obtaining clearances for work or for switching operations on equipment.

9.8 Use of Attachment Facilities by Third Parties.

9.8.1 Purpose of Attachment Facilities.

Except as may be required by Applicable Laws and Regulations, or as otherwise agreed to among the Parties, the Attachment Facilities shall be constructed for the sole purpose of interconnecting the Large Generating Facility to the New York State Transmission System and shall be used for no other purpose.

9.8.2 Third Party Users.

If required by Applicable Laws and Regulations or if the Parties mutually agree, such agreement not to be unreasonably withheld, to allow one or more third parties to use the Connecting Transmission Owner's Attachment Facilities, or any part thereof, Developer will be entitled to compensation for the capital expenses it incurred in connection with the Attachment Facilities based upon the pro rata use of the Attachment Facilities by Connecting Transmission Owner, all third party users, and Developer, in accordance with Applicable Laws and Regulations or upon some other mutually-agreed upon methodology. In addition, cost

responsibility for ongoing costs, including operation and maintenance costs associated with the Attachment Facilities, will be allocated between Developer and any third party users based upon

the pro rata use of the Attachment Facilities by Connecting Transmission Owner, all third party users, and Developer, in accordance with Applicable Laws and Regulations or upon some other mutually agreed upon methodology. If the issue of such compensation or allocation cannot be resolved through such negotiations, it shall be submitted to FERC for resolution.

9.9 Disturbance Analysis Data Exchange.

The Parties will cooperate with one another and the NYISO in the analysis of disturbances to either the Large Generating Facility or the New York State Transmission System by gathering and providing access to any information relating to any disturbance, including information from disturbance recording equipment, protective relay targets, breaker operations and sequence of events records, and any disturbance information required by Good Utility Practice.

9.10 Phasor Measurement Units

A Developer shall install and maintain, at its expense, phasor measurement units ("PMUs") if it meets the following criteria: (1) completed a Class Year after Class Year 2017; and (2) proposes a new Large Facility that either (a) has a maximum net output equal to or greater than 100 MW or (b) requires, as Attachment Facilities or System Upgrade Facilities, a new substation of 230kV or above.

PMUs shall be installed on the Large Facility on the low side of the generator step-up transformer, unless it is a non-synchronous generation facility, in which case the PMUs shall be installed on the Developer side of the Point of Interconnection. The PMUs must be capable of performing phasor measurements at a minimum of 60 samples per second which are synchronized via a high-accuracy satellite clock. To the extent Developer installs similar quality equipment, such as relays or digital fault recorders, that can collect data at least at the same rate as PMUs and which data is synchronized via a high-accuracy satellite clock, such equipment would satisfy this requirement.

Developer shall be required to install and maintain, at its expense, PMU equipment which includes the communication circuit capable of carrying the PMU data to a local data concentrator, and then transporting the information continuously to the Connecting Transmission Owner and the NYISO; as well as store the PMU data locally for thirty days. Developer shall provide to Connecting Transmission Owner and the NYISO all necessary and requested information through the Connecting Transmission Owner's and the NYISO's synchrophasor system, including the following: (a) gross MW and MVAR measured at the Developer side of the generator step-up transformer (or, for a non-synchronous generation facility, to be measured at the Developer side of the Point of Interconnection); (b) generator terminal voltage and current magnitudes and angles; (c) generator terminal frequency and frequency rate of change; and (d) generator field voltage and current, where available; and (e) breaker status, if available. The Connecting Transmission Owner will provide for the ongoing support and maintenance of the network communications linking the data concentrator to the Connecting Transmission Owner

and the NYISO, consistent with ISO Procedures detailing the obligations related to SCADA data.

SERVICE AGREEMENT NO. 2593

ARTICLE 10. MAINTENANCE

10.1 Connecting Transmission Owner Obligations.

Connecting Transmission Owner shall maintain its transmission facilities and Attachment Facilities in a safe and reliable manner and in accordance with this Agreement.

10.2 Developer Obligations.

Developer shall maintain its Large Generating Facility and Attachment Facilities in a safe and reliable manner and in accordance with this Agreement.

10.3 Coordination.

The Developer and Connecting Transmission Owner shall confer regularly to coordinate the planning, scheduling and performance of preventive and corrective maintenance on the Large Generating Facility and the Attachment Facilities. The Developer and Connecting Transmission Owner shall keep NYISO fully informed of the preventive and corrective maintenance that is planned, and shall schedule all such maintenance in accordance with NYISO procedures.

10.4 Secondary Systems.

The Developer and Connecting Transmission Owner shall each cooperate with the other in the inspection, maintenance, and testing of control or power circuits that operate below 600 volts, AC or DC, including, but not limited to, any hardware, control or protective devices, cables, conductors, electric raceways, secondary equipment panels, transducers, batteries, chargers, and voltage and current transformers that directly affect the operation of Developer or Connecting Transmission Owner's facilities and equipment which may reasonably be expected to impact the other Party. The Developer and Connecting Transmission Owner shall each provide advance notice to the other Party, and to NYISO, before undertaking any work on such circuits, especially on electrical circuits involving circuit breaker trip and close contacts, current transformers, or potential transformers.

10.5 Operating and Maintenance Expenses.

Subject to the provisions herein addressing the use of facilities by others, and except for operations and maintenance expenses associated with modifications made for providing interconnection or transmission service to a third party and such third party pays for such expenses, Developer shall be responsible for all reasonable expenses including overheads, associated with: (1) owning, operating, maintaining, repairing, and replacing Developer's Attachment Facilities; and (2) operation, maintenance, repair and replacement of Connecting Transmission Owner's Attachment Facilities. The Connecting Transmission Owner shall be entitled to the recovery of incremental operating and maintenance expenses that it incurs associated with System Upgrade Facilities and System Deliverability Upgrades if and to the extent provided for under Attachment S to the ISO OATT.

SERVICE AGREEMENT NO. 2593

ARTICLE 11. PERFORMANCE OBLIGATION

11.1 Developer's Attachment Facilities.

Developer shall design, procure, construct, install, own and/or control the Developer's Attachment Facilities described in Appendix A hereto, at its sole expense.

11.2 Connecting Transmission Owner's Attachment Facilities.

Connecting Transmission Owner shall design, procure, construct, install, own and/or control the Connecting Transmission Owner's Attachment Facilities described in Appendix A hereto, at the sole expense of the Developer.

11.3 System Upgrade Facilities and System Deliverability Upgrades.

Connecting Transmission Owner shall design, procure, construct, install, and own the System Upgrade Facilities and System Deliverability Upgrades described in Appendix A hereto. The responsibility of the Developer for costs related to System Upgrade Facilities and System Deliverability Upgrades shall be determined in accordance with the provisions of Attachment S to the ISO OATT.

11.4 Special Provisions for Affected Systems.

For the re-payment of amounts advanced to Affected System Operator for System Upgrade Facilities or System Deliverability Upgrades, the Developer and Affected System Operator shall enter into an agreement that provides for such re-payment, but only if responsibility for the cost of such System Upgrade Facilities or System Deliverability Upgrades is not to be allocated in accordance with Attachment S to the ISO OATT. The agreement shall specify the terms governing payments to be made by the Developer to the Affected System Operator as well as the re-payment by the Affected System Operator.

11.5 Provision of Security.

At least thirty (30) Calendar Days prior to the commencement of the procurement, installation, or construction of a discrete portion of a Connecting Transmission Owner's Attachment Facilities, Developer shall provide Connecting Transmission Owner, at Developer's option, a guarantee, a surety bond, letter of credit or other form of security that is reasonably acceptable to Connecting Transmission Owner and is consistent with the Uniform Commercial Code of the jurisdiction identified in Article 14.2.1 of this Agreement. Such security for payment shall be in an amount sufficient to cover the cost for the Developer's share of constructing, procuring and installing the applicable portion of Connecting Transmission Owner's Attachment Facilities, and shall be reduced on a dollar-for-dollar basis for payments made to Connecting Transmission Owner for these purposes.

In addition:

11.5.1 The guarantee must be made by an entity that meets the commercially reasonable creditworthiness requirements of Connecting Transmission Owner, and contains

terms and conditions that guarantee payment of any amount that may be due from Developer, up to an agreed-to maximum amount.

11.5.2 The letter of credit must be issued by a financial institution reasonably acceptable to Connecting Transmission Owner and must specify a reasonable expiration date.

11.5.3 The surety bond must be issued by an insurer reasonably acceptable to Connecting Transmission Owner and must specify a reasonable expiration date.

11.5.4 Attachment S to the ISO OATT shall govern the Security that Developer provides for System Upgrade Facilities and System Deliverability Upgrades.

11.6 Developer Compensation for Emergency Services.

If, during an Emergency State, the Developer provides services at the request or direction of the NYISO or Connecting Transmission Owner, the Developer will be compensated for such services in accordance with the NYISO Services Tariff.

11.7 Line Outage Costs.

Notwithstanding anything in the ISO OATT to the contrary, the Connecting Transmission Owner may propose to recover line outage costs associated with the installation of Connecting Transmission Owner's Attachment Facilities or System Upgrade Facilities or System Deliverability Upgrades on a case-by-case basis.

ARTICLE 12. INVOICE

12.1 General.

The Developer and Connecting Transmission Owner shall each submit to the other Party, on a monthly basis, invoices of amounts due for the preceding month. Each invoice shall state the month to which the invoice applies and fully describe the services and equipment provided. The Developer and Connecting Transmission Owner may discharge mutual debts and payment obligations due and owing to each other on the same date through netting, in which case all amounts one Party owes to the other Party under this Agreement, including interest payments or credits, shall be netted so that only the net amount remaining due shall be paid by the owing Party.

12.2 Final Invoice.

Within six months after completion of the construction of the Connecting Transmission Owner's Attachment Facilities and the System Upgrade Facilities and System Deliverability Upgrades, Connecting Transmission Owner shall provide an invoice of the final cost of the construction of the Connecting Transmission Owner's Attachment Facilities and the System Upgrade Facilities and System Deliverability Upgrades, determined in accordance with

Attachment S to the ISO OATT, and shall set forth such costs in sufficient detail to enable Developer to compare the actual costs with the estimates and to ascertain deviations, if any, from

the cost estimates. Connecting Transmission Owner shall refund to Developer any amount by which the actual payment by Developer for estimated costs exceeds the actual costs of construction within thirty (30) Calendar Days of the issuance of such final construction invoice.

12.3 Payment.

Invoices shall be rendered to the paying Party at the address specified in Appendix F hereto. The Party receiving the invoice shall pay the invoice within thirty (30) Calendar Days of receipt. All payments shall be made in immediately available funds payable to the other Party, or by wire transfer to a bank named and account designated by the invoicing Party. Payment of invoices will not constitute a waiver of any rights or claims the paying Party may have under this Agreement.

12.4 Disputes.

In the event of a billing dispute between Connecting Transmission Owner and Developer, Connecting Transmission Owner shall continue to perform under this Agreement as long as Developer: (i) continues to make all payments not in dispute; and (ii) pays to Connecting Transmission Owner or into an independent escrow account the portion of the invoice in dispute, pending resolution of such dispute. If Developer fails to meet these two requirements for continuation of service, then Connecting Transmission Owner may provide notice to Developer of a Default pursuant to Article 17. Within thirty (30) Calendar Days after the resolution of the dispute, the Party that owes money to the other Party shall pay the amount due with interest calculated in accord with the methodology set forth in FERC's Regulations at 18 C.F.R. § 35.19a(a)(2)(iii).

ARTICLE 13. EMERGENCIES

13.1 Obligations.

Each Party shall comply with the Emergency State procedures of NYISO, the applicable Reliability Councils, Applicable Laws and Regulations, and any emergency procedures agreed to by the NYISO Operating Committee.

13.2 Notice.

NYISO or, as applicable, Connecting Transmission Owner shall notify Developer promptly when it becomes aware of an Emergency State that affects the Connecting Transmission Owner's Attachment Facilities or the New York State Transmission System that may reasonably be expected to affect Developer's operation of the Large Generating Facility or the Developer's Attachment Facilities. Developer shall notify NYISO and Connecting Transmission Owner promptly when it becomes aware of an Emergency State that affects the Large Generating Facility or the Developer's Attachment Facilities that may reasonably be expected to affect the New York State Transmission System or the Connecting Transmission Owner's Attachment Facilities. To the extent information is known, the notification shall

describe the Emergency State, the extent of the damage or deficiency, the expected effect on the operation of Developer's or Connecting Transmission Owner's facilities and operations, its

anticipated duration and the corrective action taken and/or to be taken. The initial notice shall be followed as soon as practicable with written notice.

13.3 Immediate Action.

Unless, in Developer's reasonable judgment, immediate action is required, Developer shall obtain the consent of Connecting Transmission Owner, such consent to not be unreasonably withheld, prior to performing any manual switching operations at the Large Generating Facility or the Developer's Attachment Facilities in response to an Emergency State either declared by NYISO, Connecting Transmission Owner or otherwise regarding New York State Transmission System.

13.4 NYISO and Connecting Transmission Owner Authority.

13.4.1 General.

NYISO or Connecting Transmission Owner may take whatever actions with regard to the New York State Transmission System or the Connecting Transmission Owner's Attachment Facilities it deems necessary during an Emergency State in order to (i) preserve public health and safety, (ii) preserve the reliability of the New York State Transmission System or the Connecting Transmission Owner's Attachment Facilities, (iii) limit or prevent damage, and (iv) expedite restoration of service.

NYISO and Connecting Transmission Owner shall use Reasonable Efforts to minimize the effect of such actions or inactions on the Large Generating Facility or the Developer's Attachment Facilities. NYISO or Connecting Transmission Owner may, on the basis of technical considerations, require the Large Generating Facility to mitigate an Emergency State by taking actions necessary and limited in scope to remedy the Emergency State, including, but not limited to, directing Developer to shut-down, start-up, increase or decrease the real or reactive power output of the Large Generating Facility; implementing a reduction or disconnection pursuant to Article 13.4.2; directing the Developer to assist with blackstart (if available) or restoration efforts; or altering the outage schedules of the Large Generating Facility and the Developer's Attachment Facilities. Developer shall comply with all of the NYISO and Connecting Transmission Owner's operating instructions concerning Large Generating Facility real power and reactive power output within the manufacturer's design limitations of the Large Generating Facility's equipment that is in service and physically available for operation at the time, in compliance with Applicable Laws and Regulations.

13.4.2 Reduction and Disconnection.

NYISO or Connecting Transmission Owner may reduce Energy Resource Interconnection Service and Capacity Resource Interconnection Service or disconnect the Large Generating Facility or the Developer's Attachment Facilities, when such reduction or disconnection is necessary under Good Utility Practice due to an Emergency State. These rights are separate and distinct from any right of Curtailment of NYISO pursuant to the ISO OATT.

When NYISO or Connecting Transmission Owner can schedule the reduction or disconnection in advance, NYISO or Connecting Transmission Owner shall notify Developer of the reasons,

timing and expected duration of the reduction or disconnection. NYISO or Connecting Transmission Owner shall coordinate with the Developer using Good Utility Practice to schedule the reduction or disconnection during periods of least impact to the Developer and the New York State Transmission System. Any reduction or disconnection shall continue only for so long as reasonably necessary under Good Utility Practice. The Parties shall cooperate with each other to restore the Large Generating Facility, the Attachment Facilities, and the New York State Transmission System to their normal operating state as soon as practicable consistent with Good Utility Practice.

13.5 Developer Authority.

Consistent with Good Utility Practice and this Agreement, the Developer may take whatever actions or inactions with regard to the Large Generating Facility or the Developer's Attachment Facilities during an Emergency State in order to (i) preserve public health and safety, (ii) preserve the reliability of the Large Generating Facility or the Developer's Attachment Facilities, (iii) limit or prevent damage, and (iv) expedite restoration of service. Developer shall use Reasonable Efforts to minimize the effect of such actions or inactions on the New York State Transmission System and the Connecting Transmission Owner's Attachment Facilities. NYISO and Connecting Transmission Owner shall use Reasonable Efforts to assist Developer in such actions.

13.6 Limited Liability.

Except as otherwise provided in Article 11.6 of this Agreement, no Party shall be liable to another Party for any action it takes in responding to an Emergency State so long as such action is made in good faith and is consistent with Good Utility Practice and the NYISO Tariffs.

ARTICLE 14. REGULATORY REQUIREMENTS AND GOVERNING LAW

14.1 Regulatory Requirements.

Each Party's obligations under this Agreement shall be subject to its receipt of any required approval or certificate from one or more Governmental Authorities in the form and substance satisfactory to the applying Party, or the Party making any required filings with, or providing notice to, such Governmental Authorities, and the expiration of any time period associated therewith. Each Party shall in good faith seek and use its Reasonable Efforts to obtain such other approvals. Nothing in this Agreement shall require Developer to take any action that could result in its inability to obtain, or its loss of, status or exemption under the Federal Power Act or the Public Utility Holding Company Act of 2005 or the Public Utility Regulatory Policies Act of 1978, as amended.

14.2 Governing Law.

14.2.1 The validity, interpretation and performance of this Agreement and each of its provisions shall be governed by the laws of the state of New York, without regard to its conflicts of law principles.

SERVICE AGREEMENT NO. 2593

14.2.2 This Agreement is subject to all Applicable Laws and Regulations.

14.2.3 Each Party expressly reserves the right to seek changes in, appeal, or otherwise contest any laws, orders, rules, or regulations of a Governmental Authority.

ARTICLE 15. NOTICES

15.1 General.

Unless otherwise provided in this Agreement, any notice, demand or request required or permitted to be given by a Party to the other Parties and any instrument required or permitted to be tendered or delivered by a Party in writing to the other Parties shall be effective when delivered and may be so given, tendered or delivered, by recognized national courier, or by depositing the same with the United States Postal Service with postage prepaid, for delivery by certified or registered mail, addressed to the Party, or personally delivered to the Party, at the address set out in Appendix F hereto.

A Party may change the notice information in this Agreement by giving five (5) Business Days written notice prior to the effective date of the change.

15.2 Billings and Payments.

Billings and payments shall be sent to the addresses set out in Appendix F hereto.

15.3 Alternative Forms of Notice.

Any notice or request required or permitted to be given by a Party to the other Parties and not required by this Agreement to be given in writing may be so given by telephone, facsimile or email to the telephone numbers and email addresses set out in Appendix F hereto.

15.4 Operations and Maintenance Notice.

Developer and Connecting Transmission Owner shall each notify the other Party, and NYISO, in writing of the identity of the person(s) that it designates as the point(s) of contact with respect to the implementation of Articles 9 and 10 of this Agreement.

ARTICLE 16. FORCE MAJEURE

16.1 Economic hardship is not considered a Force Majeure event.

16.2 A Party shall not be responsible or liable, or deemed, in Default with respect to any obligation hereunder, (including obligations under Article 4 of this Agreement) , other than the obligation to pay money when due, to the extent the Party is prevented from fulfilling such obligation by Force Majeure. A Party unable to fulfill any obligation hereunder (other than an obligation to pay money when due) by reason of Force Majeure shall give notice and the full particulars of such Force Majeure to the other Parties in writing or by telephone as soon as

reasonably possible after the occurrence of the cause relied upon. Telephone notices given pursuant to this Article shall be confirmed in writing as soon as reasonably possible and shall

specifically state full particulars of the Force Majeure, the time and date when the Force Majeure occurred and when the Force Majeure is reasonably expected to cease. The Party affected shall exercise due diligence to remove such disability with reasonable dispatch, but shall not be required to accede or agree to any provision not satisfactory to it in order to settle and terminate a strike or other labor disturbance.

ARTICLE 17. DEFAULT

17.1 General.

No Breach shall exist where such failure to discharge an obligation (other than the payment of money) is the result of Force Majeure as defined in this Agreement or the result of an act or omission of the other Parties. Upon a Breach, the non-Breaching Parties shall give written notice of such to the Breaching Party. The Breaching Party shall have thirty (30) Calendar Days from receipt of the Breach notice within which to cure such Breach; provided however, if such Breach is not capable of cure within thirty (30) Calendar Days, the Breaching Party shall commence such cure within thirty (30) Calendar Days after notice and continuously and diligently complete such cure within ninety (90) Calendar Days from receipt of the Breach notice; and, if cured within such time, the Breach specified in such notice shall cease to exist.

17.2 Right to Terminate.

If a Breach is not cured as provided in this Article 17, or if a Breach is not capable of being cured within the period provided for herein, the non-Breaching Parties acting together shall thereafter have the right to declare a Default and terminate this Agreement by written notice at any time until cure occurs, and be relieved of any further obligation hereunder and, whether or not those Parties terminate this Agreement, to recover from the defaulting Party all amounts due hereunder, plus all other damages and remedies to which they are entitled at law or in equity. The provisions of this Article will survive termination of this Agreement.

ARTICLE 18. INDEMNITY, CONSEQUENTIAL DAMAGES AND INSURANCE

18.1 Indemnity.

Each Party (the "Indemnifying Party") shall at all times indemnify, defend, and save harmless, as applicable, the other Parties (each an "Indemnified Party") from, any and all damages, losses, claims, including claims and actions relating to injury to or death of any person or damage to property, the alleged violation of any Environmental Law, or the release or threatened release of any Hazardous Substance, demand, suits, recoveries, costs and expenses, court costs, attorney fees, and all other obligations by or to third parties (any and all of these a "Loss"), arising out of or resulting from (i) the Indemnified Party's performance of its obligations under this Agreement on behalf of the Indemnifying Party, except in cases where the Indemnifying Party can demonstrate that the Loss of the Indemnified Party was caused by the gross negligence or intentional wrongdoing of the Indemnified Party or (ii) the violation by the

Indemnifying Party of any Environmental Law or the release by the Indemnifying Party of any Hazardous Substance.

SERVICE AGREEMENT NO. 2593

18.1.1 Indemnified Party.

If a Party is entitled to indemnification under this Article 18 as a result of a claim by a third party, and the Indemnifying Party fails, after notice and reasonable opportunity to proceed under Article 18.1.3, to assume the defense of such claim, such Indemnified Party may at the expense of the Indemnifying Party contest, settle or consent to the entry of any judgment with respect to, or pay in full, such claim.

18.1.2 Indemnifying Party.

If an Indemnifying Party is obligated to indemnify and hold any Indemnified Party harmless under this Article 18, the amount owing to the Indemnified Party shall be the amount of such Indemnified Party's actual Loss, net of any insurance or other recovery.

18.1.3 Indemnity Procedures.

Promptly after receipt by an Indemnified Party of any claim or notice of the commencement of any action or administrative or legal proceeding or investigation as to which the indemnity provided for in Article 18.1 may apply, the Indemnified Party shall notify the Indemnifying Party of such fact. Any failure of or delay in such notification shall not affect a Party's indemnification obligation unless such failure or delay is materially prejudicial to the Indemnifying Party.

Except as stated below, the Indemnifying Party shall have the right to assume the defense thereof with counsel designated by such Indemnifying Party and reasonably satisfactory to the Indemnified Party. If the defendants in any such action include one or more Indemnified Parties and the Indemnifying Party and if the Indemnified Party reasonably concludes that there may be legal defenses available to it and/or other Indemnified Parties which are different from or additional to those available to the Indemnifying Party, the Indemnified Party shall have the right to select separate counsel to assert such legal defenses and to otherwise participate in the defense of such action on its own behalf. In such instances, the Indemnifying Party shall only be required to pay the fees and expenses of one additional attorney to represent an Indemnified Party or Indemnified Parties having such differing or additional legal defenses.

The Indemnified Party shall be entitled, at its expense, to participate in any such action, suit or proceeding, the defense of which has been assumed by the Indemnifying Party. Notwithstanding the foregoing, the Indemnifying Party (i) shall not be entitled to assume and control the defense of any such action, suit or proceedings if and to the extent that, in the opinion of the Indemnified Party and its counsel, such action, suit or proceeding involves the potential imposition of criminal liability on the Indemnified Party, or there exists a conflict or adversity of interest between the Indemnified Party and the Indemnifying Party, in such event the Indemnifying Party shall pay the reasonable expenses of the Indemnified Party, and (ii) shall not settle or consent to the entry of any judgment in any action, suit or proceeding without the

consent of the Indemnified Party, which shall not be unreasonably withheld, conditioned or delayed.

SERVICE AGREEMENT NO. 2593

18.2 No Consequential Damages.

Other than the liquidated damages heretofore described and the indemnity obligations set forth in Article 18.1, in no event shall any Party be liable under any provision of this Agreement for any losses, damages, costs or expenses for any special, indirect, incidental, consequential, or punitive damages, including but not limited to loss of profit or revenue, loss of the use of equipment, cost of capital, cost of temporary equipment or services, whether based in whole or in part in contract, in tort, including negligence, strict liability, or any other theory of liability; provided, however, that damages for which a Party may be liable to another Party under separate agreement will not be considered to be special, indirect, incidental, or consequential damages hereunder.

18.3 Insurance.

Developer and Connecting Transmission Owner shall each, at its own expense, procure and maintain in force throughout the period of this Agreement and until released by the other Parties, the following minimum insurance coverages, with insurance companies licensed to write insurance or approved eligible surplus lines carriers in the state of New York with a minimum A.M. Best rating of A or better for financial strength, and an A.M. Best financial size category of VIII or better:

18.3.1 Employers' Liability and Workers' Compensation Insurance providing statutory benefits in accordance with the laws and regulations of New York State.

18.3.2 Commercial General Liability ("CGL") Insurance including premises and operations, personal injury, broad form property damage, broad form blanket contractual liability coverage products and completed operations coverage, coverage for explosion, collapse and underground hazards, independent contractors coverage, coverage for pollution to the extent normally available and punitive damages to the extent normally available using Insurance Services Office, Inc. Commercial General Liability Coverage ("ISO CG") Form CG 00 01 04 13 or a form equivalent to or better than CG 00 01 04 13, with minimum limits of Two Million Dollars ($2,000,000) per occurrence and Two Million Dollars ($2,000,000) aggregate combined single limit for personal injury, bodily injury, including death and property damage.

18.3.3 Comprehensive Automobile Liability Insurance for coverage of owned and non-owned and hired vehicles, trailers or semi-trailers designed for travel on public roads, with a minimum, combined single limit of One Million Dollars ($1,000,000) per occurrence for bodily injury, including death, and property damage.

18.3.4 If applicable, the Commercial General Liability and Comprehensive Automobile Liability Insurance policies should include contractual liability for work in connection with construction or demolition work on or within 50 feet of a railroad, or a separate Railroad Protective Liability Policy should be provided.

18.3.5 Excess Liability Insurance over and above the Employers' Liability,

Commercial General Liability and Comprehensive Automobile Liability Insurance coverages, with a minimum combined single limit of Twenty Million Dollars ($20,000,000) per occurrence

SERVICE AGREEMENT NO. 2593

and Twenty Million Dollars ($20,000,000) aggregate. The Excess policies should contain the same extensions listed under the Primary policies.

18.3.6 The Commercial General Liability Insurance, Comprehensive Automobile Insurance and Excess Liability Insurance policies of Developer and Connecting Transmission Owner shall name the other Party, its parent, associated and Affiliate companies and their respective directors, officers, agents, servants and employees ("Other Party Group") as additional insureds using ISO CG Endorsements: CG 20 33 04 13, and CG 20 37 04 13 or CG 20 10 04 13 and CG 20 37 04 13 or equivalent to or better forms. All policies shall contain provisions whereby the insurers waive all rights of subrogation in accordance with the provisions of this Agreement against the Other Party Group and provide thirty (30) Calendar days advance written notice to the Other Party Group prior to anniversary date of cancellation or any material change in coverage or condition.

18.3.7 The Commercial General Liability Insurance, Comprehensive Automobile Liability Insurance and Excess Liability Insurance policies shall contain provisions that specify that the policies are primary and non-contributory. Developer and Connecting Transmission Owner shall each be responsible for its respective deductibles or retentions.

18.3.8 The Commercial General Liability Insurance, Comprehensive Automobile Liability Insurance and Excess Liability Insurance policies, if written on a Claims First Made Basis, shall be maintained in full force and effect for at least three (3) years after termination of this Agreement, which coverage may be in the form of tail coverage or extended reporting period coverage if agreed by the Developer and Connecting Transmission Owner.

18.3.9 If applicable, Pollution Liability Insurance in an amount no less than $7,500,000 per occurrence and $7,500,000 in the aggregate. The policy will provide coverage for claims resulting from pollution or other environmental impairment arising out of or in connection with work performed on the premises by the other party, its contractors and and/or subcontractors. Such insurance is to include coverage for, but not be limited to, cleanup, third party bodily injury and property damage and remediation and will be written on an occurrence basis. The policy shall name the Other Party Group as additional insureds, be primary and contain a waiver of subrogation.

18.3.10 The requirements contained herein as to the types and limits of all insurance to be maintained by the Developer and Connecting Transmission Owner are not intended to and shall not in any manner, limit or qualify the liabilities and obligations assumed by those Parties under this Agreement.

18.3.11 Within sixty (60) days following execution of this Agreement, and as soon as practicable after the end of each fiscal year or at the renewal of the insurance policy and in any event within ninety (90) days thereafter, Developer and Connecting Transmission Owner

shall provide certificate of insurance for all insurance required in this Agreement, executed by each insurer or by an authorized representative of each insurer.

18.3.12 Notwithstanding the foregoing, Developer and Connecting Transmission Owner may each self-insure to meet the minimum insurance requirements of Articles 18.3.1 through 18.3.9 to the extent it maintains a self-insurance program; provided that, such Party's senior debt is rated at investment grade, or better, by Standard & Poor's and that its self-insurance program meets the minimum insurance requirements of Articles 18.3.1 through 18.3.9. In the event that a Party is permitted to self-insure pursuant to this Article 18.3.12, it shall notify the other Party that it meets the requirements to self-insure and that its self-insurance program meets the minimum insurance requirements in a manner consistent with that specified in Articles 18.3.1 through 18.3.9 and provide evidence of such coverages. For any period of time that a Party's senior debt is unrated by Standard & Poor's or is rated at less than investment grade by Standard & Poor's, such Party shall comply with the insurance requirements applicable to it under Articles 18.3.1 through 18.3.9.

18.3.13 Developer and Connecting Transmission Owner agree to report to each other in writing as soon as practical all accidents or occurrences resulting in injuries to any person, including death, and any property damage arising out of this Agreement.

18.3.14 Subcontractors of each party must maintain the same insurance requirements stated under Articles 18.3.1 through 18.3.9 and comply with the Additional Insured requirements herein. In addition, their policies must state that they are primary and non-contributory and contain a waiver of subrogation.

ARTICLE 19. ASSIGNMENT

This Agreement may be assigned by a Party only with the written consent of the other Parties; provided that a Party may assign this Agreement without the consent of the other Parties to any Affiliate of the assigning Party with an equal or greater credit rating and with the legal authority and operational ability to satisfy the obligations of the assigning Party under this Agreement; provided further that a Party may assign this Agreement without the consent of the other Parties in connection with the sale, merger, restructuring, or transfer of a substantial portion or all of its assets, including the Attachment Facilities it owns, so long as the assignee in such a transaction directly assumes in writing all rights, duties and obligations arising under this Agreement; and provided further that the Developer shall have the right to assign this Agreement, without the consent of the NYISO or Connecting Transmission Owner, for collateral security purposes to aid in providing financing for the Large Generating Facility, provided that the Developer will promptly notify the NYISO and Connecting Transmission Owner of any such assignment. Any financing arrangement entered into by the Developer pursuant to this Article will provide that prior to or upon the exercise of the secured party's, trustee's or mortgagee's assignment rights pursuant to said arrangement, the secured creditor, the trustee or mortgagee will notify the NYISO and Connecting Transmission Owner of the date and particulars of any such exercise of assignment right(s) and will provide the NYISO and Connecting Transmission

Owner with proof that it meets the requirements of Articles 11.5 and 18.3. Any attempted assignment that violates this Article is void and ineffective. Any assignment under this

SERVICE AGREEMENT NO. 2593

Agreement shall not relieve a Party of its obligations, nor shall a Party's obligations be enlarged, in whole or in part, by reason thereof. Where required, consent to assignment will not be unreasonably withheld, conditioned or delayed.

ARTICLE 20. SEVERABILITY

If any provision in this Agreement is finally determined to be invalid, void or unenforceable by any court or other Governmental Authority having jurisdiction, such determination shall not invalidate, void or make unenforceable any other provision, agreement or covenant of this Agreement; provided that if the Developer (or any third party, but only if such third party is not acting at the direction of the Connecting Transmission Owner) seeks and obtains such a final determination with respect to any provision of the Alternate Option (Article 5.1.2), or the Negotiated Option (Article 5.1.4), then none of these provisions shall thereafter have any force or effect and the rights and obligations of Developer and Connecting Transmission Owner shall be governed solely by the Standard Option (Article 5.1.1).

ARTICLE 21. COMPARABILITY

The Parties will comply with all applicable comparability and code of conduct laws, rules and regulations, as amended from time to time.

ARTICLE 22. CONFIDENTIALITY

22.1 Confidentiality.

Certain information exchanged by the Parties during the term of this Agreement shall constitute confidential information ("Confidential Information") and shall be subject to this Article 22.

If requested by a Party receiving information, the Party supplying the information shall provide in writing, the basis for asserting that the information referred to in this Article warrants confidential treatment, and the requesting Party may disclose such writing to the appropriate Governmental Authority. Each Party shall be responsible for the costs associated with affording confidential treatment to its information.

22.2 Term.

During the term of this Agreement, and for a period of three (3) years after the expiration or termination of this Agreement, except as otherwise provided in this Article 22, each Party shall hold in confidence and shall not disclose to any person Confidential Information.

22.3 Confidential Information.

The following shall constitute Confidential Information: (1) any non-public information that is treated as confidential by the disclosing Party and which the disclosing Party identifies as Confidential Information in writing at the time, or promptly after the time, of disclosure; or (2)

information designated as Confidential Information by the NYISO Code of Conduct contained in Attachment F to the ISO OATT.

SERVICE AGREEMENT NO. 2593

22.4 Scope.

Confidential Information shall not include information that the receiving Party can demonstrate: (1) is generally available to the public other than as a result of a disclosure by the receiving Party; (2) was in the lawful possession of the receiving Party on a non-confidential basis before receiving it from the disclosing Party; (3) was supplied to the receiving Party without restriction by a third party, who, to the knowledge of the receiving Party after due inquiry, was under no obligation to the disclosing Party to keep such information confidential; (4) was independently developed by the receiving Party without reference to Confidential Information of the disclosing Party; (5) is, or becomes, publicly known, through no wrongful act or omission of the receiving Party or Breach of this Agreement; or (6) is required, in accordance with Article 22.9 of this Agreement, Order of Disclosure, to be disclosed by any Governmental Authority or is otherwise required to be disclosed by law or subpoena, or is necessary in any legal proceeding establishing rights and obligations under this Agreement. Information designated as Confidential Information will no longer be deemed confidential if the Party that designated the information as confidential notifies the other Party that it no longer is confidential.

22.5 Release of Confidential Information.

No Party shall release or disclose Confidential Information to any other person, except to its Affiliates (limited by FERC Standards of Conduct requirements), subcontractors, employees, consultants, or to parties who may be considering providing financing to or equity participation with Developer, or to potential purchasers or assignees of a Party, on a need-to-know basis in connection with this Agreement, unless such person has first been advised of the confidentiality provisions of this Article 22 and has agreed to comply with such provisions. Notwithstanding the foregoing, a Party providing Confidential Information to any person shall remain primarily responsible for any release of Confidential Information in contravention of this Article 22.

22.6 Rights.

Each Party retains all rights, title, and interest in the Confidential Information that each Party discloses to the other Party. The disclosure by each Party to the other Parties of Confidential Information shall not be deemed a waiver by any Party or any other person or entity of the right to protect the Confidential Information from public disclosure.

22.7 No Warranties.

By providing Confidential Information, no Party makes any warranties or representations as to its accuracy or completeness. In addition, by supplying Confidential Information, no Party obligates itself to provide any particular information or Confidential Information to the other Parties nor to enter into any further agreements or proceed with any other relationship or joint venture.

SERVICE AGREEMENT NO. 2593

22.8 Standard of Care.

Each Party shall use at least the same standard of care to protect Confidential Information it receives as it uses to protect its own Confidential Information from unauthorized disclosure, publication or dissemination. Each Party may use Confidential Information solely to fulfill its obligations to the other Parties under this Agreement or its regulatory requirements, including the ISO OATT and NYISO Services Tariff. The NYISO shall, in all cases, treat the information it receives in accordance with the requirements of Attachment F to the ISO OATT.

22.9 Order of Disclosure.

If a court or a Government Authority or entity with the right, power, and apparent authority to do so requests or requires any Party, by subpoena, oral deposition, interrogatories, requests for production of documents, administrative order, or otherwise, to disclose Confidential Information, that Party shall provide the other Parties with prompt notice of such request(s) or requirement(s) so that the other Parties may seek an appropriate protective order or waive compliance with the terms of this Agreement. Notwithstanding the absence of a protective order or waiver, the Party may disclose such Confidential Information which, in the opinion of its counsel, the Party is legally compelled to disclose. Each Party will use Reasonable Efforts to obtain reliable assurance that confidential treatment will be accorded any Confidential Information so furnished.

22.10 Termination of Agreement.

Upon termination of this Agreement for any reason, each Party shall, within ten (10) Calendar Days of receipt of a written request from the other Parties, use Reasonable Efforts to destroy, erase, or delete (with such destruction, erasure, and deletion certified in writing to the other Parties) or return to the other Parties, without retaining copies thereof, any and all written or electronic Confidential Information received from the other Parties pursuant to this Agreement.

22.11 Remedies.

The Parties agree that monetary damages would be inadequate to compensate a Party for another Party's Breach of its obligations under this Article 22. Each Party accordingly agrees that the other Parties shall be entitled to equitable relief, by way of injunction or otherwise, if the first Party Breaches or threatens to Breach its obligations under this Article 22, which equitable relief shall be granted without bond or proof of damages, and the receiving Party shall not plead in defense that there would be an adequate remedy at law. Such remedy shall not be deemed an exclusive remedy for the Breach of this Article 22, but shall be in addition to all other remedies available at law or in equity. The Parties further acknowledge and agree that the covenants contained herein are necessary for the protection of legitimate business interests and are reasonable in scope. No Party, however, shall be liable for indirect, incidental, or consequential or punitive damages of any nature or kind resulting from or arising in connection with this Article 22.

SERVICE AGREEMENT NO. 2593

22.12 Disclosure to FERC, its Staff, or a State.

Notwithstanding anything in this Article 22 to the contrary, and pursuant to 18 C.F.R. section 1b.20, if FERC or its staff, during the course of an investigation or otherwise, requests information from one of the Parties that is otherwise required to be maintained in confidence pursuant to this Agreement or the ISO OATT, the Party shall provide the requested information to FERC or its staff, within the time provided for in the request for information. In providing the information to FERC or its staff, the Party must, consistent with 18 C.F.R. section 388.112, request that the information be treated as confidential and non-public by FERC and its staff and that the information be withheld from public disclosure. Parties are prohibited from notifying the other Parties to this Agreement prior to the release of the Confidential Information to the Commission or its staff. The Party shall notify the other Parties to the Agreement when it is notified by FERC or its staff that a request to release Confidential Information has been received by FERC, at which time the Parties may respond before such information would be made public, pursuant to 18 C.F.R. section 388.112. Requests from a state regulatory body conducting a confidential investigation shall be treated in a similar manner if consistent with the applicable state rules and regulations. A Party shall not be liable for any losses, consequential or otherwise, resulting from that Party divulging Confidential Information pursuant to a FERC or state regulatory body request under this paragraph.

22.13 Required Notices Upon Requests or Demands for Confidential Information

Except as otherwise expressly provided herein, no Party shall disclose Confidential Information to any person not employed or retained by the Party possessing the Confidential Information, except to the extent disclosure is (i) required by law; (ii) reasonably deemed by the disclosing Party to be required to be disclosed in connection with a dispute between or among the Parties, or the defense of litigation or dispute; (iii) otherwise permitted by consent of the other Party, such consent not to be unreasonably withheld; or (iv) necessary to fulfill its obligations under this Agreement, the ISO OATT or the NYISO Services Tariff. Prior to any disclosures of a Party's Confidential Information under this subparagraph, or if any third party or Governmental Authority makes any request or demand for any of the information described in this subparagraph, the disclosing Party agrees to promptly notify the other Party in writing and agrees to assert confidentiality and cooperate with the other Party in seeking to protect the Confidential Information from public disclosure by confidentiality agreement, protective order or other reasonable measures.

ARTICLE 23. DEVELOPER AND CONNECTING TRANSMISSION OWNER NOTICES OF ENVIRONMENTAL RELEASES

Developer and Connecting Transmission Owner shall each notify the other Party, first orally and then in writing, of the release of any Hazardous Substances, any asbestos or lead abatement activities, or any type of remediation activities related to the Large Generating Facility or the Attachment Facilities, each of which may reasonably be expected to affect the other Party. The notifying Party shall: (i) provide the notice as soon as practicable, provided such Party makes a good faith effort to provide the notice no later than twenty-four hours after such Party

becomes aware of the occurrence; and (ii) promptly furnish to the other Party copies of any publicly available reports filed with any Governmental Authorities addressing such events.

SERVICE AGREEMENT NO. 2593

ARTICLE 24. INFORMATION REQUIREMENT

24.1 Information Acquisition.

Connecting Transmission Owner and Developer shall each submit specific information regarding the electrical characteristics of their respective facilities to the other, and to NYISO, as described below and in accordance with Applicable Reliability Standards.

24.2 Information Submission by Connecting Transmission Owner.

The initial information submission by Connecting Transmission Owner shall occur no later than one hundred eighty (180) Calendar Days prior to Trial Operation and shall include New York State Transmission System information necessary to allow the Developer to select equipment and meet any system protection and stability requirements, unless otherwise mutually agreed to by the Developer and Connecting Transmission Owner. On a monthly basis Connecting Transmission Owner shall provide Developer and NYISO a status report on the construction and installation of Connecting Transmission Owner's Attachment Facilities and System Upgrade Facilities and System Deliverability Upgrades, including, but not limited to, the following information: (1) progress to date; (2) a description of the activities since the last report; (3) a description of the action items for the next period; and (4) the delivery status of equipment ordered.

24.3 Updated Information Submission by Developer.

The updated information submission by the Developer, including manufacturer information, shall occur no later than one hundred eighty (180) Calendar Days prior to the Trial Operation. Developer shall submit a completed copy of the Large Generating Facility data requirements contained in Appendix 1 to the Standard Large Facility Interconnection Procedures. It shall also include any additional information provided to Connecting Transmission Owner for the Interconnection Facilities Study. Information in this submission shall be the most current Large Generating Facility design or expected performance data. Information submitted for stability models shall be compatible with NYISO standard models. If there is no compatible model, the Developer will work with a consultant mutually agreed to by the Parties to develop and supply a standard model and associated information.

If the Developer's data is different from what was originally provided to Connecting Transmission Owner and NYISO pursuant to an Interconnection Study Agreement among Connecting Transmission Owner, NYISO and Developer and this difference may be reasonably expected to affect the other Parties' facilities or the New York State Transmission System, but does not require the submission of a new Interconnection Request, then NYISO will conduct appropriate studies to determine the impact on the New York State Transmission System based on the actual data submitted pursuant to this Article 24.3. Such studies will provide an estimate of any additional modifications to the New York State Transmission System, Connecting Transmission Owner's Attachment Facilities or System Upgrade Facilities or System Deliverability Upgrades based on the actual data and a good faith estimate of the costs thereof. The Developer shall not begin Trial Operation until such studies are completed. The Developer

shall be responsible for the cost of any modifications required by the actual data, including the cost of any required studies.

24.4 Information Supplementation.

Prior to the Commercial Operation Date, the Developer and Connecting Transmission Owner shall supplement their information submissions described above in this Article 24 with any and all "as-built" Large Generating Facility information or "as-tested" performance information that differs from the initial submissions or, alternatively, written confirmation that no such differences exist. The Developer shall conduct tests on the Large Generating Facility as required by Good Utility Practice such as an open circuit "step voltage" test on the Large Generating Facility to verify proper operation of the Large Generating Facility's automatic voltage regulator.

Unless otherwise agreed, the test conditions shall include: (1) Large Generating Facility at synchronous speed; (2) automatic voltage regulator on and in voltage control mode; and (3) a five percent change in Large Generating Facility terminal voltage initiated by a change in the voltage regulators reference voltage. Developer shall provide validated test recordings showing the responses of Large Generating Facility terminal and field voltages. In the event that direct recordings of these voltages is impractical, recordings of other voltages or currents that mirror the response of the Large Generating Facility's terminal or field voltage are acceptable if information necessary to translate these alternate quantities to actual Large Generating Facility terminal or field voltages is provided. Large Generating Facility testing shall be conducted and results provided to the Connecting Transmission Owner and NYISO for each individual generating unit in a station.

Subsequent to the Commercial Operation Date, the Developer shall provide Connecting Transmission Owner and NYISO any information changes due to equipment replacement, repair, or adjustment. Connecting Transmission Owner shall provide the Developer and NYISO any information changes due to equipment replacement, repair or adjustment in the directly connected substation or any adjacent Connecting Transmission Owner substation that may affect the Developer Attachment Facilities equipment ratings, protection or operating requirements. The Developer and Connecting Transmission Owner shall provide such information no later than thirty (30) Calendar Days after the date of the equipment replacement, repair or adjustment.

ARTICLE 25. INFORMATION ACCESS AND AUDIT RIGHTS

25.1 Information Access.

Each Party ("Disclosing Party") shall make available to another Party ("Requesting Party") information that is in the possession of the Disclosing Party and is necessary in order for the Requesting Party to: (i) verify the costs incurred by the Disclosing Party for which the Requesting Party is responsible under this Agreement; and (ii) carry out its obligations and responsibilities under this Agreement. The Parties shall not use such information for purposes other than those set forth in this Article 25.1 of this Agreement and to enforce their rights under this Agreement.

60

SERVICE AGREEMENT NO. 2593

25.2 Reporting of Non-Force Majeure Events.

Each Party (the "Notifying Party") shall notify the other Parties when the Notifying Party becomes aware of its inability to comply with the provisions of this Agreement for a reason other than a Force Majeure event. The Parties agree to cooperate with each other and provide necessary information regarding such inability to comply, including the date, duration, reason for the inability to comply, and corrective actions taken or planned to be taken with respect to such inability to comply. Notwithstanding the foregoing, notification, cooperation or information provided under this Article shall not entitle the Party receiving such notification to allege a cause for anticipatory breach of this Agreement.

25.3 Audit Rights.

Subject to the requirements of confidentiality under Article 22 of this Agreement, each Party shall have the right, during normal business hours, and upon prior reasonable notice to another Party, to audit at its own expense the other Party's accounts and records pertaining to the other Party's performance or satisfaction of its obligations under this Agreement. Such audit rights shall include audits of the other Party's costs, calculation of invoiced amounts, and each Party's actions in an Emergency State. Any audit authorized by this Article shall be performed at the offices where such accounts and records are maintained and shall be limited to those portions of such accounts and records that relate to the Party's performance and satisfaction of obligations under this Agreement. Each Party shall keep such accounts and records for a period equivalent to the audit rights periods described in Article 25.4 of this Agreement.

25.4 Audit Rights Periods.

25.4.1 Audit Rights Period for Construction-Related Accounts and Records.

Accounts and records related to the design, engineering, procurement, and construction of Connecting Transmission Owner's Attachment Facilities and System Upgrade Facilities and System Deliverability Upgrades shall be subject to audit for a period of twenty-four months following Connecting Transmission Owner's issuance of a final invoice in accordance with Article 12.2 of this Agreement.

25.4.2 Audit Rights Period for All Other Accounts and Records.

Accounts and records related to a Party's performance or satisfaction of its obligations under this Agreement other than those described in Article 25.4.1 of this Agreement shall be subject to audit as follows: (i) for an audit relating to cost obligations, the applicable audit rights period shall be twenty-four months after the auditing Party's receipt of an invoice giving rise to such cost obligations; and (ii) for an audit relating to all other obligations, the applicable audit rights period shall be twenty-four months after the event for which the audit is sought.

SERVICE AGREEMENT NO. 2593

25.5 Audit Results.

If an audit by a Party determines that an overpayment or an underpayment has occurred, a notice of such overpayment or underpayment shall be given to the other Party together with those records from the audit which support such determination.

ARTICLE 26. SUBCONTRACTORS

26.1 General.

Nothing in this Agreement shall prevent a Party from utilizing the services of any subcontractor as it deems appropriate to perform its obligations under this Agreement; provided, however, that each Party shall require its subcontractors to comply with all applicable terms and conditions of this Agreement in providing such services and each Party shall remain primarily liable to the other Parties for the performance of such subcontractor.

26.2 Responsibility of Principal.

The creation of any subcontract relationship shall not relieve the hiring Party of any of its obligations under this Agreement. The hiring Party shall be fully responsible to the other Parties for the acts or omissions of any subcontractor the hiring Party hires as if no subcontract had been made; provided, however, that in no event shall the NYISO or Connecting Transmission Owner be liable for the actions or inactions of the Developer or its subcontractors with respect to obligations of the Developer under Article 5 of this Agreement. Any applicable obligation imposed by this Agreement upon the hiring Party shall be equally binding upon, and shall be construed as having application to, any subcontractor of such Party.

26.3 No Limitation by Insurance.

The obligations under this Article 26 will not be limited in any way by any limitation of subcontractor's insurance.

ARTICLE 27. DISPUTES

27.1 Submission.

In the event any Party has a dispute, or asserts a claim, that arises out of or in connection with this Agreement or its performance (a "Dispute"), such Party shall provide the other Parties with written notice of the Dispute ("Notice of Dispute"). Such Dispute shall be referred to a designated senior representative of each Party for resolution on an informal basis as promptly as practicable after receipt of the Notice of Dispute by the other Parties. In the event the designated representatives are unable to resolve the Dispute through unassisted or assisted negotiations within thirty (30) Calendar Days of the other Parties' receipt of the Notice of Dispute, such Dispute may, upon mutual agreement of the Parties, be submitted to arbitration and resolved in accordance with the arbitration procedures set forth below. In the event the Parties do not agree

to submit such Dispute to arbitration, each Party may exercise whatever rights and remedies it may have in equity or at law consistent with the terms of this Agreement.

SERVICE AGREEMENT NO. 2593

27.2 External Arbitration Procedures.

Any arbitration initiated under this Agreement shall be conducted before a single neutral arbitrator appointed by the Parties. If the Parties fail to agree upon a single arbitrator within ten (10) Calendar Days of the submission of the Dispute to arbitration, each Party shall choose one arbitrator who shall sit on a three-member arbitration panel. In each case, the arbitrator(s) shall be knowledgeable in electric utility matters, including electric transmission and bulk power issues, and shall not have any current or past substantial business or financial relationships with any party to the arbitration (except prior arbitration). The arbitrator(s) shall provide each of the Parties an opportunity to be heard and, except as otherwise provided herein, shall conduct the arbitration in accordance with the Commercial Arbitration Rules of the American Arbitration Association ("Arbitration Rules") and any applicable FERC regulations or RTO rules; provided, however, in the event of a conflict between the Arbitration Rules and the terms of this Article 27, the terms of this Article 27 shall prevail.

27.3 Arbitration Decisions.

Unless otherwise agreed by the Parties, the arbitrator(s) shall render a decision within ninety (90) Calendar Days of appointment and shall notify the Parties in writing of such decision and the reasons therefor. The arbitrator(s) shall be authorized only to interpret and apply the provisions of this Agreement and shall have no power to modify or change any provision of this Agreement in any manner. The decision of the arbitrator(s) shall be final and binding upon the Parties, and judgment on the award may be entered in any court having jurisdiction. The decision of the arbitrator(s) may be appealed solely on the grounds that the conduct of the arbitrator(s), or the decision itself, violated the standards set forth in the Federal Arbitration Act or the Administrative Dispute Resolution Act. The final decision of the arbitrator must also be filed with FERC if it affects jurisdictional rates, terms and conditions of service, Attachment Facilities, System Upgrade Facilities, or System Deliverability Upgrades.

27.4 Costs.

Each Party shall be responsible for its own costs incurred during the arbitration process and for the following costs, if applicable: (1) the cost of the arbitrator chosen by the Party to sit on the three member panel; or (2) one-third the cost of the single arbitrator jointly chosen by the Parties.

27.5 Termination.

Notwithstanding the provisions of this Article 27, any Party may terminate this Agreement in accordance with its provisions or pursuant to an action at law or equity. The issue of whether such a termination is proper shall not be considered a Dispute hereunder.

ARTICLE 28. REPRESENTATIONS, WARRANTIES AND COVENANTS

28.1 General.

Each Party makes the following representations, warranties and covenants:

SERVICE AGREEMENT NO. 2593

28.1.1 Good Standing.

Such Party is duly organized, validly existing and in good standing under the laws of the state in which it is organized, formed, or incorporated, as applicable; that it is qualified to do business in the state or states in which the Large Generating Facility, Attachment Facilities and System Upgrade Facilities and System Deliverability Upgrades owned by such Party, as applicable, are located; and that it has the corporate power and authority to own its properties, to carry on its business as now being conducted and to enter into this Agreement and carry out the transactions contemplated hereby and perform and carry out all covenants and obligations on its part to be performed under and pursuant to this Agreement.

28.1.2 Authority.

Such Party has the right, power and authority to enter into this Agreement, to become a Party hereto and to perform its obligations hereunder. This Agreement is a legal, valid and binding obligation of such Party, enforceable against such Party in accordance with its terms, except as the enforceability thereof may be limited by applicable bankruptcy, insolvency, reorganization or other similar laws affecting creditors' rights generally and by general equitable principles (regardless of whether enforceability is sought in a proceeding in equity or at law).

28.1.3 No Conflict.

The execution, delivery and performance of this Agreement does not violate or conflict with the organizational or formation documents, or bylaws or operating agreement, of such Party, or any judgment, license, permit, order, material agreement or instrument applicable to or binding upon such Party or any of its assets.

28.1.4 Consent and Approval.

Such Party has sought or obtained, or, in accordance with this Agreement will seek or obtain, each consent, approval, authorization, order, or acceptance by any Governmental Authority in connection with the execution, delivery and performance of this Agreement, and it will provide to any Governmental Authority notice of any actions under this Agreement that are required by Applicable Laws and Regulations.

ARTICLE 29. MISCELLANEOUS

29.1 Binding Effect.

This Agreement and the rights and obligations hereof, shall be binding upon and shall inure to the benefit of the successors and permitted assigns of the Parties hereto.

29.2 Conflicts.

If there is a discrepancy or conflict between or among the terms and conditions of this cover agreement and the Appendices hereto, the terms and conditions of this cover agreement

64

shall be given precedence over the Appendices, except as otherwise expressly agreed to in writing by the Parties.

29.3 Rules of Interpretation.

This Agreement, unless a clear contrary intention appears, shall be construed and interpreted as follows: (1) the singular number includes the plural number and vice versa; (2) reference to any person includes such person's successors and assigns but, in the case of a Party, only if such successors and assigns are permitted by this Agreement, and reference to a person in a particular capacity excludes such person in any other capacity or individually; (3) reference to any agreement (including this Agreement), document, instrument or tariff means such agreement, document, instrument, or tariff as amended or modified and in effect from time to time in accordance with the terms thereof and, if applicable, the terms hereof; (4) reference to any Applicable Laws and Regulations means such Applicable Laws and Regulations as amended, modified, codified, or reenacted, in whole or in part, and in effect from time to time, including, if applicable, rules and regulations promulgated thereunder; (5) unless expressly stated otherwise, reference to any Article, Section or Appendix means such Article of this Agreement or such Appendix to this Agreement, or such Section to the Standard Large Facility Interconnection Procedures or such Appendix to the Standard Large Facility Interconnection Procedures, as the case may be; (6) "hereunder", "hereof", "herein", "hereto" and words of similar import shall be deemed references to this Agreement as a whole and not to any particular Article or other provision hereof or thereof; (7) "including" (and with correlative meaning "include") means including without limiting the generality of any description preceding such term; and (8) relative to the determination of any period of time, "from" means "from and including", "to" means "to but excluding" and "through" means "through and including".

29.4 Compliance.

Each Party shall perform its obligations under this Agreement in accordance with Applicable Laws and Regulations, Applicable Reliability Standards, the ISO OATT and Good Utility Practice. To the extent a Party is required or prevented or limited in taking any action by such regulations and standards, such Party shall not be deemed to be in Breach of this Agreement for its compliance therewith. When any Party becomes aware of such a situation, it shall notify the other Parties promptly so that the Parties can discuss the amendment to this Agreement that is appropriate under the circumstances.

29.5 Joint and Several Obligations.

Except as otherwise stated herein, the obligations of NYISO, Developer and Connecting Transmission Owner are several, and are neither joint nor joint and several.

29.6 Entire Agreement.

This Agreement, including all Appendices and Schedules attached hereto, constitutes the entire agreement between the Parties with reference to the subject matter hereof, and supersedes all

prior and contemporaneous understandings or agreements, oral or written, between the Parties with respect to the subject matter of this Agreement. There are no other agreements,

representations, warranties, or covenants which constitute any part of the consideration for, or any condition to, either Party's compliance with its obligations under this Agreement.

29.7 No Third Party Beneficiaries.

This Agreement is not intended to and does not create rights, remedies, or benefits of any character whatsoever in favor of any persons, corporations, associations, or entities other than the Parties, and the obligations herein assumed are solely for the use and benefit of the Parties, their successors in interest and permitted their assigns.

29.8 Waiver.

The failure of a Party to this Agreement to insist, on any occasion, upon strict performance of any provision of this Agreement will not be considered a waiver of any obligation, right, or duty of, or imposed upon, such Party. Any waiver at any time by either Party of its rights with respect to this Agreement shall not be deemed a continuing waiver or a waiver with respect to any other failure to comply with any other obligation, right, duty of this Agreement. Termination or Default of this Agreement for any reason by the Developer shall not constitute a waiver of the Developer's legal rights to obtain Capacity Resource Interconnection Service and Energy Resource Interconnection Service from the NYISO and Connecting Transmission Owner in accordance with the provisions of the ISO OATT. Any waiver of this Agreement shall, if requested, be provided in writing.

29.9 Headings.

The descriptive headings of the various Articles of this Agreement have been inserted for convenience of reference only and are of no significance in the interpretation or construction of this Agreement.

29.10 Multiple Counterparts.

This Agreement may be executed in two or more counterparts, each of which is deemed an original but all constitute one and the same instrument.

29.11 Amendment.

The Parties may by mutual agreement amend this Agreement, by a written instrument duly executed by all three of the Parties.

29.12 Modification by the Parties.

The Parties may by mutual agreement amend the Appendices to this Agreement, by a written instrument duly executed by all three of the Parties. Such an amendment shall become effective and a part of this Agreement upon satisfaction of all Applicable Laws and Regulations.

SERVICE AGREEMENT NO. 2593

29.13 Reservation of Rights.

NYISO and Connecting Transmission Owner shall have the right to make unilateral filings with FERC to modify this Agreement with respect to any rates, terms and conditions, charges, classifications of service, rule or regulation under section 205 or any other applicable provision of the Federal Power Act and FERC's rules and regulations thereunder, and Developer shall have the right to make a unilateral filing with FERC to modify this Agreement pursuant to section 206 or any other applicable provision of the Federal Power Act and FERC's rules and regulations thereunder; provided that each Party shall have the right to protest any such filing by another Party and to participate fully in any proceeding before FERC in which such modifications may be considered. Nothing in this Agreement shall limit the rights of the Parties or of FERC under sections 205 or 206 of the Federal Power Act and FERC's rules and regulations thereunder, except to the extent that the Parties otherwise mutually agree as provided herein.

29.14 No Partnership.

This Agreement shall not be interpreted or construed to create an association, joint venture, agency relationship, or partnership among the Parties or to impose any partnership obligation or partnership liability upon any Party. No Party shall have any right, power or authority to enter into any agreement or undertaking for, or act on behalf of, or to act as or be an agent or representative of, or to otherwise bind, any other Party.

29.15 Other Transmission Rights.

Notwithstanding any other provision of this Agreement, nothing herein shall be construed as relinquishing or foreclosing any rights, including but not limited to firm transmission rights, capacity rights, or transmission congestion rights that the Developer shall be entitled to, now or in the future under any other agreement or tariff as a result of, or otherwise associated with, the transmission capacity, if any, created by the System Upgrade Facilities and System Deliverability Upgrades.

SERVICE AGREEMENT NO. 2593

IN WITNESS WHEREOF, the Parties have executed this LGIA in duplicate originals, each of which shall constitute and be an original effective Agreement between the Parties.

New York Independent System Operator, Inc.

By:

Name:

Title:

Date:

Niagara Mohawk Power Corporation d/b/a National Grid

By:

Name:

Title:

Date:

PPM Roaring Brook, LLC

By:

Name:

Title:

Date:

By:

Name:

Title:

Date:

SERVICE AGREEMENT NO. 2593

APPENDICES

Appendix A
Attachment Facilities and System Upgrade Facilities

Appendix B
Milestones

Appendix C
Interconnection Details

Appendix D
Security Arrangements Details

Appendix E-1
Initial Synchronization Date

Appendix E-2
Commercial Operation Date

Appendix F
Addresses for Delivery of Notices and Billings

SERVICE AGREEMENT NO. 2593

APPENDIX A

ATTACHMENT FACILITIES AND SYSTEM UPGRADE FACILITIES

1. Attachment Facilities:

(a) Developer's Attachment Facilities

The Developer's Attachment Facilities ("DAFs") include all of the facilities between the Developer's side of the Point of Change of Ownership ("PCO") and the Large Generating Facility, except the Connecting Transmission Owner-owned metering and telecommunications equipment described in Section 1(b) below. The DAFs will be located on property owned or leased by the Developer.

The Developer will make use or upgrade certain existing facilities of Flat Rock Wind LLC ("Flat Rock") at its collection station for the Maple Ridge I and Maple Ridge II wind facilities ("Rector Road Substation") for purposes of interconnecting to the New York State Transmission System. On July 10, 2020, Developer entered into a Joint Ownership Agreement with Flat Rock Windpower LLC and Flat Rock Windpower II LLC, whereby Developer acquired an undivided 19.86 percent ownership interest, as a tenant in common, in the existing Line 10 and facilities within the Rector Road Substation required to deliver the electrical output of the Large Generating Facility to Connecting Transmission Owner's Chases Lake Station.

Developer shall be responsible for coordinating with Flat Rock Windpower LLC and Flat Rock Windpower II LLC concerning the shared use of Line 10 and the facilities within the Rector Road Substation to ensure the operation of the Large Generating Facility in accordance with this Agreement, the NYISO Tariffs, and ISO Procedures, including addressing among the Developer, Flat Rock Windpower LLC, and Flat Rock Windpower II LLC the impacts of any outages, limitations, or interruptions of the shared Attachment Facilities. The NYISO shall not be responsible for securing the Developer's Attachment Facilities or dispatching the associated generating facilities to address any outages, limitations, or interruptions of the Developer's Attachment Facilities. If, subsequent to the execution of this Agreement, the NYISO were to designate any of the Developer's Attachment Facilities as ISO Secured, ISO Controlled, or BMS Secured in Attachment A of the NYISO Outage Scheduling Manual, the NYISO would then take on the responsibilities associated with those designations per the NYISO Tariffs and ISO Procedures for the impacted Developer's Attachment Facilities.

As depicted in Figure A-1 to this Appendix A, the DAFs will consist of a collector station for the Large Generating Facility ("Roaring Brook Wind Collector Substation"), a new line position at Flat Rock's Rector Road Substation, telecommunications, and the existing Line 10 from the Rector Road Substation to Connecting Transmission Owner's existing Chases Lake Station. The DAFs shall be designed, constructed, operated, and maintained by the Developer in accordance with the following requirements, to the extent not inconsistent with the terms of this Agreement, the NYISO OATT, or applicable NYISO Procedures: NYISO requirements,

industry standards and specifications, regulatory requirements, the Connecting Transmission Owner's applicable Electric System Bulletins ("ESBs"), provided at the following website:

SERVICE AGREEMENT NO. 2593

https://www.nationalgridus.com/ProNet/Technical-Resources/Electric-Specifications, and Good Utility Practice. The Developer shall submit all engineering design and electrical specifications associated with the DAFs to the Connecting Transmission Owner for its review and acceptance in accordance with the ESBs.

Specifically, the DAFs will consist of the following major electrical and physical equipment:

Roaring Brook Wind Collector Substation

The Roaring Brook Wind Collector Substation will be located adjacent to the Rector Road Substation and will consist of the following major electrical and physical equipment:

- One (1) 230kV, 2000A, motor operated air break switch;
- One (1) set of 180kV, 144kV maximum continuous operating voltage ("MCOV") station class surge arresters;
- One (1) 230kV, 2000A, sulfur hexafluoride ("SF_6") circuit breaker;
- One (1) three phase, three winding, 230kV/34.5 kV/13.1 kV grounded wye/ grounded-wye/delta, plant step-up ("PSU") transformer rated 51/68/85MVA (ONAN/ONAF/ONAF);
- One (1) 34.5kV, 2000A, motor operated air break switch;
- Three (3) 38kV, 1200A, SF_6 circuit breakers;
- Six (6) Vee type breaker isolation disconnect switches;
- One (1) set of 27kV, 22kV MCOV station class surge arresters;
- Three (3) sets of 30kV, 24kV MCOV station class surge arresters;
- Two (2) 100k Volt-ampere ("VA") station service transformers; and
- Various instrument transformers for controls and protection.

Rector Road Substation

The Large Generating Facility will tie to the Rector Road Substation's 230kV bus. The Large Generating Facility will utilize the existing Line 10 from the Rector Road Substation to interconnect to Connecting Transmission Owner's existing Chases Lake Station.

Telecommunications Circuits

In accordance with the ESBs, the Developer is required to provide generator status to the Connecting Transmission Owner's Energy Management System ("EMS"). As such, the Developer shall provide a Distributed Network Protocol ("DNP") enabled port on the Connecting Transmission Owner's Remote Transmitting Unit ("RTU") that shall be installed at the Roaring Brook Wind Collector Station.

A new leased fiber service shall be required at the Roaring Brook Wind Collector Station to support EMS RTU communications back to the Connecting Transmission Owner's control

center. The Developer will order one (1) leased telco circuit for EMS RTU connectivity to the Connecting Transmission Owner's EMS multiprotocol label switching ("MPLS") network. The

circuit type will be based on fiber services offered by Frontier Communications at the time of the order and must be approved by Connecting Transmission Owner prior to the order being placed. The two possible options are:

- Option 1: One Verizon/Frontier 10Mb/ 1Mb Port, Type 2 Ethernet Circuit. This circuit shall be ordered from Verizon Business Services using circuit parameters provided by Connecting Transmission Owner. Frontier will deliver the local loop portion on fiber equipment installed in the Roaring Brook administration building. The Developer will be responsible for extending the circuit from its admin building to the DX-940 location using fiber cable and 10/100 Ethernet-to-Fiber Media converters.

- Option 2 (if Ethernet is note available): One Verizon/Frontier T1 MPLS service. This circuit will be ordered from Verizon Business Services using circuit parameters provided by Connecting Transmission Owner. Frontier will deliver the local loop portion on fiber equipment installed in the Roaring Brook admin building. The Developer will be responsible for extending the circuit from its admin building to the DX-940 location using fiber cable and DS1-to-Fiber Media converters.

The Developer will order one plain old telephone service ("POTS") line from Frontier Communications. Frontier will deliver the POTS line on fiber equipment installed in the Roaring Brook admin building. The Developer will be responsible for extending the POTS line to any/all devices requiring dial-up connectivity.

The Developer will provide a dedicated 4'x8'x3/4" backboard to support a dedicated wall mount rack with -48VDC power for the Frontier fiber mux. A DC/DC converter system will be installed in the dedicated telecom rack to convert 125VDC station battery to -48VDC. The Developer is responsible for ordering the Telco fiber facility required at Rector Road Substation. *(Note: Third party telecommunications are potentially long lead time items.)*

All protection scheme design drawings and relay settings shall be prepared by the Developer's NYS licensed professional engineer, and the design and equipment specifications shall be provided to the Connecting Transmission Owner for review and acceptance in accordance with the ESBs.

(b) Connecting Transmission Owner's Attachment Facilities

The PCO and the Point of Interconnection ("POI") are designated on Figure A-1 to this Appendix A. The Connecting Transmission Owner's Attachment Facilities ("CTOAFs") include the facilities between the PCO and the POI, as well as revenue metering and an RTU located at the Roaring Brook Wind Collector Substation.

As depicted in Figure A-1, the CTOAFs include the following major electrical and physical equipment:

Revenue Metering

A-3

SERVICE AGREEMENT NO. 2593

Connecting Transmission Owner owns and operates all existing revenue metering at the Rector Road Substation. The existing meters are part of a complicated, complex, custom scheme that attributes losses among the two existing generation facilities - Maple Ridge I and Maple Ridge II. This existing scheme is not in compliance with the Connecting Transmission Owner's standard revenue metering practices, cannot be reliably expanded to include the Large Generating Facility, and is not maintainable. Therefore, in addition to adding revenue metering for the Large Generating Facility, the existing metering at the Rector Road Substation must be replaced with the Connecting Transmission Owner's standard revenue metering. As such, the existing ION meters will be removed and replaced. Developer and Flat Rock will enter into an agreement to attribute line losses among the Maple Ridge I facility, the Maple Ridge II facility, and the Large Generating Facility.

Connecting Transmission Owner will procure the three (3) combination current /potential transformers ("CT"/"PT") units (i.e., the metering units) required for the Large Generating Facility at the Roaring Brook Wind Collector Substation and the upgrades for the Maple Ridge I and Maple Ridge II facilities at the Rector Road Substation. The manufacturer and model of the units shall be GE Grid Solutions KOTEF 245.ER, or other Connecting Transmission Ownerspecified equivalent. The ratios of the CTs and PTs will be provided upon review of the Developer's design documents according to ESB 752. (Note: Developer procured the metering units in advance of the Facilities Study completion. Ownership of the metering units must be transferred to the Connecting Transmission Owner prior to the synchronization of the Large Generating Facility to the Connecting Transmission Owner's system.)

For purposes of the Roaring Brook Wind Collector Substation, the Developer will mount and make grounding and primary wire connections to the new metering units at the Roaring Brook Wind Collector Station. The Developer shall furnish and install conduit for the wiring from the instrument transformers to the new meter sockets (supplied by the Connecting Transmission Owner) in accordance with ESB 758, ESB 752 and ESB 750. The Connecting Transmission Owner will provide, run and wire both ends of the color-coded instrument transformer secondary cables for the new meter sockets. The Developer will facilitate this by preparing for the Connecting Transmission Owner to run and terminate the cables. Connecting Transmission Owner's Meter & Test department will procure and provide the one new meter socket for the new meter, and the Developer shall install it on the billing meter panel in the Roaring Brook Wind Collector Substation.

For purposes of the Rector Road Substation, the Connecting Transmission will replace the two (2) existing ION meters at the Rector Road Substation with standard revenue meters which will interconnect with Connecting Transmission Owner's existing communications equipment at the station. The Connecting Transmission Owner will make the connections. The Connecting Transmission Owner will perform this work at the Rector Road Substation pursuant to the existing interconnection agreement between the Connecting Transmission Owner and Flat Rock, dated January 16, 2004, which was filed with the Commission in Docket No. ER04-423 and accepted by the Commission on March 15, 2004. Connecting Transmission Owner will recover the costs of this work from Developer pursuant to this Agreement.

A-4

SERVICE AGREEMENT NO. 2593

(Note: Connecting Transmission Owner does not allow for revenue metering CTs and voltage transformers ("VTs") to be used to feed the Developer's check meter. However, due to the unique characteristics associated with this interconnection (*i.e.,* interconnection via Rector Road), Connecting Transmission Owner will make an exception and allow Developer to use the second secondary VT winding with the following qualifications/requirements: (a) all drawings related to the CT/VTs, including wiring diagrams must be submitted to Connecting Transmission Owner for review and acceptance prior to installation, (b) any changes to the wiring of the CT/VTs (now or at any time in the future) must be provided to Connecting Transmission Owner for review and acceptance before any work is initiated, and (c) if the something happens to the windings that Connecting Transmission Owner's revenue metering is connected to, then the check meter will be disconnected so as to allow for the second secondary windings to be used for the revenue metering.)

In accordance with Article 7.1 of this Agreement, Developer requests to receive from the Connecting Transmission Owner KYZ pulse data from the revenue meters installed at the Roaring Brook Wind Collector Substation. In accordance with ESB 756A, Section 3.3.3 item 7, Connecting Transmission Owner will provide terminal block or media converter equipment at Developer's expense if needed. These signals will be at the point of the metering and will represent the kWh energy for operation of their equipment. These signals are for information only and the Connecting Transmission Owner shall not be liable for distorted or missing pulses.

EMS-RTU

The Connecting Transmission Owner will procure and provide the RTU to the Developer for installation in the Roaring Brook Wind Collector Station control enclosure. The RTU cabinet is typically 42" H x 30" W x 12" D and shall be wall-mounted with the bottom edge 36" above the floor with a 5-foot clear working space in front of the mounting panel. As per ESB 756A, the Developer shall install the RTU indoors and within 15 feet of the meter(s), and remote from:

- Heavy traffic areas, work areas, and loading areas;
- Heat producing or high electrostatic or electromagnetic field producing equipment; and
- Station batteries.

A dedicated 20A, 120VAC, single phase 60 hertz power circuit is required for the RTU. All conduit and wiring (minimum of No. 10 AWG copper) to the telemetry cabinet for this circuit shall enter the cabinet from the bottom. A 3-ft length of all conductors shall be provided for final Connecting Transmission Owner connection cabinet. A dedicated 10A, 48VDC or a preferred 125VDC input is required to the RTU from the station battery.

The Connecting Transmission Owner-owned revenue meter at the Roaring Brook Wind Collector Substation shall connect to the RTU via RS-485. RS-485 to RS-232 converters will be required. The Connecting Transmission Owner shall complete all final termination of Developer supplied wiring within the RTU cabinet, along with all RTU testing and commissioning.

A data communication service shall be installed by the Developer in accordance with Section 1(a) above. Required EMS data requirements are as follows:

SERVICE AGREEMENT NO. 2593

- Status of 230kV switch;
- Status of 230kV circuit breaker;
- MW at 230kV line side of the generator step-up ("GSU") transformer;
- MVAR at 230V line side of the GSU transformer; and
- Dispatch signals (if required) will be required to be transmitted to or from the NYISO via the Connecting Transmission Owner's EMS RTU.

To determine the data requirements of the NYISO, the Developer shall contact the appropriate customer service representative at the NYISO for determination of the economic model that will be applied for the Large Generating Facility. The Developer shall convey to the Connecting Transmission Owner, as part of its initial final design and equipment specifications submittal, the NYISO's data requirements and PTID for incorporation in the system design.

2. System Upgrade Facilities:

(a) System Upgrade Facilities at Chases Lake Substation:

The Large Generating Facility will interconnect to the New York State Transmission System via Flat Rock's Rector Road Substation at Connecting Transmission Owner's existing Chases Lake Station. Connecting Transmission Owner shall be responsible for the engineering, procurement and construction of all System Upgrade Facilities at its Chases Lake Station.

Protection

The existing 'A' current differential package on Chases Lake's Line 10, consisting of AREVA MICOM P544 relay and SEL-311B for Direct Transfer Trip ("DTT") transmit/receive with fiber optic pair communication to Rector Road Substation, will be reutilized. The existing 'B' Permissive Overreaching Transfer Trip ("POTT") package on Chases Lake's Line 10, consisting of SEL-421 relay and SEL-311B for DTT transmit/receive with RFL IMUX 2000 over microwave, will be reutilized. Due to the addition of the Large Generating Facility, Connecting Transmission Owner will complete an area coordination study during final engineering and may result in resetting of relays in the area. The Developer shall be responsible for all costs associated with this study.

Controls and Integration

The existing Remote Terminal Unit is sufficient for the scope of work required for the Large Generating Facility.

Telecommunications

Chases Lake Station has a Frontier Positron Telelite Fiber facility. This facility delivers multiple circuits including one EMS RTU. No upgrade is required for this circuit. The station

has a direct fiber connection to the Rector Road Substation supporting the A package CD protection scheme. No upgrade is required to the direct fiber path for the Large Generating

SERVICE AGREEMENT NO. 2593

Facility. Chases Lake also has a private network RFL IMUX Channel Bank facing the Rector Road Substation over microwave. This path provides the B package POTT protection. No upgrade is required to this private network connection for the Large Generating Facility.

(b) Other System Upgrade Facilities

i. Flat Rock's Rector Road Substation

The NYISO determined in the Part 1 Facilities Study for the Large Generating Facility that Flat Rock is an Affected System in connection with the impact of the interconnection of the Large Generating Facility on Flat Rock's Rector Road Substation. Developer will design, procure, and construct System Upgrade Facilities at Flat Rock's Rector Road Substation. Pursuant to Section 30.3.5 of Attachment X of the NYISO OATT, Developer will perform this work in accordance with a separate Engineering, Procurement, and Construction Agreement among Flat Rock, the Developer, the NYISO, and the Connecting Transmission Owner. The System Upgrade Facilities for the Rector Road Substation will include the following major electrical and physical equipment:

- 230 kV bus work to permit tie-in of the Roaring Brook Wind Collector Substation;
- Control cabling; and
- Revised relay settings.

ii. New York Power Authority's Adirondack Substation

The NYISO determined in the Part 1 Facilities Study for the Large Generating Facility that the New York Power Authority is an Affected System in connection with the impact of the interconnection of the Large Generating Facility on NYPA's Adirondack Substation. The System Upgrade Facilities for the Adirondack Substation will include the following major electrical and physical equipment:

- Revised primary and secondary line CL13 relay settings. The primary relay is denoted OPTIMHO / CL13 and the secondary relay is denoted GE L90.

Pursuant to Section 30.3.5 of Attachment X of the NYISO OATT, NYPA will perform this work at its Adirondack Substation in accordance with a separate Engineering, Procurement, and Construction Agreement among the NYISO, NYPA, and the Developer.

3. System Deliverability Upgrades:

System Deliverability Upgrades required for the Large Generating Facility, if any, will be identified in the Class Year Study for Class Year 2019.

A-7

SERVICE AGREEMENT NO. 2593

4. Estimated Costs

The total estimated costs *(+30%/-15%)* of the work associated with the Attachment Facilities and upgrade facilities required for the interconnection of the Large Generating Facility are presented in the table below.

Q546 Roaring Brook Wind Project Facilities Study Estimate	
Developer Attachment Facilities (DAFs)	
Engineering review and compliance verification of the ICIF, including all required drawings and equipment specifications reviews, relay settings, construction and testing assistance by engineering, field verification, and witness testing	$75,500
Connecting Transmission Owner Attachment Facilities (CTO AFs)	
Engineering, design, construction, testing and commissioning for revenue metering and EMS-RTU at Collector Station and line tap.	
EMS-RTU & Rev. Metering	$397,500
CTO IF Subtotal	***$397,500***
System Upgrade Facilities (SUFs)	
Engineering, design, construction, testing and commissioning for revenue metering and EMS-RTU.	
Chases Lake	$133,600
SUF Subtotal	***$133,600***

Subtotal	**$606,600**
Contingency	$139,600
TOTAL	**$746,200**

The estimates provided assume:

- 5X10 construction work week;
- Outages are available;
- All major material is delivered to site (ie., no costs are included for transport from storage); and
- Existing equipment to remain is functional.

As described in the Part 1 Facilities Study for the Large Generating Facility, the estimates provided herein exclude:

- discussions and negotiations of issued interconnection study,
- application fees,
- applicable surcharges,
- overall project sales tax,

- property taxes,

- income tax,
- line switching,
- property/easement acquisitions,
- future operation and maintenance costs,
- escalation beyond estimated project completion date shown in milestone schedule,
- future operation and maintenance costs,
- recurring monthly communications circuits' charges, if any, responsible by the Developer to the communications utility,
- allowance for funds used during construction (AFUDC) assuming Developer upfront payment,
- adverse field conditions such as rock, water, weather, and Developer electrical equipment obstructions,
- access roads and associated matting,
- environmental mitigation,
- extended engineering and/or construction hours to minimize outage time or Connecting Transmission Owner's public duty to serve,
- extended craft labor hours to minimize outage time and/or construction time,
- the cost of any temporary construction service, or
- any required permits.

5. Operating and Maintenance Expenses

In accordance with Article 10.5 of this Agreement, the Developer shall be responsible for all reasonable expenses associated with the operation, maintenance, repair and replacement of the Connecting Transmission Owner's Attachment Facilities at the Roaring Brook Wind Collector Substation, as such facilities are detailed in this Appendix A ("O&M Expenses").

The Developer shall have the option to pay such O&M Expenses either under the procedure described in Option 1 or in Option 2 below.

Option 1: Fixed On-Going Charge Payment:

The Connecting Transmission Owner will invoice and Developer shall pay an annual payment to the Connecting Transmission Owner equal to the product of the Gross Plant Investment associated with the Connecting Transmission Owner Attachment Facilities and the Annual Transmission Ongoing Charge Factor, for the term of this Interconnection Agreement.

All payments due to be made by the Developer shall be made within thirty (30) days after receiving an invoice from the Connecting Transmission Owner.

The Project's Connecting Transmission Owner's Attachment Facilities Gross Plant Investment cost shall be established in writing by the Connecting Transmission Owner no later than 90 days following commercial operation. For purposes of his Agreement, Gross Plant Investment shall mean the investment from the plant account records

A-9

associated with the Connecting Transmission Owner's Attachment Facilities for the Large Generating Facility.

The Annual Transmission On-Going Charge Factor shall be calculated annually each July based on the Connecting Transmission Owner's most recent FERC Form 1 data and will equal the sum of the Revenue Requirement Components as identified in O&M Attachment 1 divided by the Total Gross Plant of the Connecting Transmission Owner. Total Gross Plant shall equal the sum of Item Nos. A (1)(a)(b)(c) in O&M Attachment 1.

Option 2: Quarterly Actual O&M Expenses

The Developer shall pay for all actual O&M Expenses incurred by the Connecting Transmission Owner, which expenses shall be billed by the Connecting Transmission Owner quarterly as accumulated during the quarter for which they were incurred.

All payments due to be made by the Developer shall be made within thirty (30) days after receiving an invoice from the Connecting Transmission Owner, which invoice shall be issued after the end of each quarter for the most recent quarter.

Selection by Developer

The Developer shall select which option for paying such O&M Expenses by providing written notice to the Connecting Transmission Owner within thirty (30) days after the Connecting Transmission Owner's Attachment Facilities Gross Plant Investment cost and the most recent Annual Transmission Ongoing Charge Factor have been provided to the Developer. If the Developer fails to provide timely notice to the Connecting Transmission Owner of the option selected, the Developer will be deemed to have selected Option 2: Quarterly Actual O&M Expenses.

A-10

SERVICE AGREEMENT NO. 2593

O&M ATTACHMENT 1

Capitalized terms used in this calculation will have the following definitions:

Allocation Factor

(1) General Plant Allocation Factor shall equal Electric General Plant divided by the sum of Electric General Plant plus gas general plant as reported in the Annual Report filed with the New York State Public Service Commission.

(2) Gross Transmission Plant Allocation Factor shall equal the total investment in Transmission Plant in Service divided by the sum of the total Transmission Plant in Service plus the total Distribution Plant in Service, excluding Intangible Plant, General Plant and Common Plant.

(3) Transmission Wages and Salaries Allocation Factor shall equal the ratio of Connecting Transmission Owner Transmission-related direct electric wages and salaries including any direct wages or salaries charged to Connecting Transmission Owner by a Connecting Transmission Owner Affiliate to Connecting Transmission Owner's total electric direct wages and salaries including any wages charged to Connecting Transmission Owner by a Connecting Transmission Owner Affiliate excluding any electric administrative and general wages and salaries.

Ratebase and Expense items

(1) Administrative and General Expense shall equal electric expenses as recorded in FERC Account Nos. 920-935.

(2) Amortization of Investment Tax Credits shall equal electric credits as recorded in FERC Account No. 411.4.

(3) Distribution Plant in Service shall equal the gross plant balance as recorded in FERC Account Nos. 360 - 374.

(4) Electric Common Plant shall equal the balance of Common Plant recorded in FERC Account Nos. 389-399 multiplied by the General Plant Allocation Factor.

(5) General Plant shall equal electric gross general plant balance recorded in FERC Account Nos. 389-399.

(6) Materials and Supplies shall equal electric materials and supplies balance as recorded in FERC Account No. 154.

(7) Payroll Taxes shall equal those electric payroll tax expenses as recorded in FERC Account Nos. 408.100, 408.110 and 408.130.

(8) Prepayments shall equal electric prepayment balance as recorded in FERC Account

A-11

SERVICE AGREEMENT NO. 2593

(9) Real Estate Tax Expenses shall equal electric transmission-related real estate tax expense as recorded in FERC Account No. 408.140 and 408.180.

(10) Transmission Operation and Maintenance Expense shall equal electric expenses as recorded in FERC Account Nos. 560, 562-573.

(11) Transmission Plant in Service shall equal the gross plant balance as recorded in FERC Account Nos. 350-359.

(12) Transmission Revenue Credits shall equal the revenue reported in Account 456

(13) Transmission Related Bad Debt Expense shall equal Bad Debt Expense as reported in Account 904 related to transmission billing.

(14) Wholesale Metering Cost shall equal any costs associated with any Revenue or Remote Terminal Unit (RTU) meters and associated equipment located at an internal or external tie at voltages equal to or greater than 23V. The cost shall be determined by multiplying the number of wholesale meters in FERC Account No. 370.3 by the average cost of the meters plus the average costs of installation.

In the event that the above-referenced FERC accounts are renumbered, renamed, or otherwise modified, the above sections shall be deemed amended to incorporate such renumbered, renamed, modified or additional accounts.

Revenue Requirement Components

The Revenue Requirement Components shall be the sum of Connecting Transmission Owner's (A) Return and Associated Income Taxes, (B) Transmission Related Real Estate Tax Expense, (C) Transmission Related Amortization of Investment Tax Credits, (D) Transmission Related Payroll Tax Expense (E) Transmission Operation and Maintenance Expense, (F) Transmission Related Administrative and General Expenses, less (G) Revenue Credits, plus (H) Bad Debt Expense.

A. Return and Associated Income Taxes shall equal the product of the Transmission Investment Base as identified in A(1) below and the Cost of Capital Rate.

1. Transmission Investment Base shall be defined as

   Transmission Related General Plant plus Transmission Related Common Plant plus Transmission Related Regulatory Assets plus Transmission Related Prepayments plus Transmission Related Materials and Supplies plus Transmission Related Cash Working Capital.

   (a) Transmission Plant in Service shall equal the balance of Total investment in Transmission Plant plus Wholesale Metering Cost.

   (b) Transmission Related General Plant shall equal the balance of

investment in General Plant multiplied by the Transmission Wages and Salaries Allocation Factor.

SERVICE AGREEMENT NO. 2593

(c) Transmission Related Common Plant shall equal Electric Common Plant multiplied by the Gross Transmission Plant Allocation Factor and multiplied by the Transmission Wages and Salaries Allocation Factor.

(d) Transmission Related Regulatory Assets shall equal balances in FERC Account Nos. 182.3 and 254 for state and federal regulatory assets and liabilities related to FAS109, and excess AFUDC multiplied by the Gross Transmission Plant Allocation Factor

(e) Transmission Related Prepayments shall equal the electric balance of Prepayments multiplied by the Gross Transmission Plant Allocation Factor.

(f) Transmission Related Materials and Supplies shall equal the balance of Materials and Supplies assigned to Transmission added to the remainder of Material and Supplies not directly assigned to either Transmission or Distribution multiplied by the Gross Transmission Plant Allocation Factor.

(g) Transmission Related Cash Working Capital shall be a 12.5% allowance (45 days/360 days) of the Transmission Operation and Maintenance Expense (less FERC Account 565: Transmission of Electricity by Others) and Transmission-Related Administrative and General Expense.

2. Cost of Capital Rate

The Cost of Capital Rate shall equal the proposed Weighted Costs of Capital plus Federal Income Taxes and State Income Taxes.

(a) The Weighted Costs of Capital will be calculated for the Transmission Investment Base using Connecting Transmission Owner's actual capital structure and will equal the sum of (i), (ii), and (iii) below:

(i) the long-term debt component, which equals the product of the actual weighted average embedded cost to maturity of Connecting Transmission Owner's long-term debt then outstanding and the actual long-term debt capitalization ratio.

(ii) the preferred stock component, which equals the product of the actual weighted average embedded cost to maturity of Connecting Transmission Owner's preferred stock then

outstanding and the actual preferred stock capitalization ratio;

SERVICE AGREEMENT NO. 2593

(iii) the return on equity component, shall be the product of the allowed ROE of 10.30% or such value as most recently approved by the Commission plus a 50 basis point adder (per FERC Order 697 and 697-A, if authorized by the Commission for the Connecting Transmission Owner) and Connecting Transmission Owner's actual common equity capitalization ratio.

(b) Federal Income Tax shall equal

$$\frac{A \times \text{Federal Income Tax Rate}}{(1 - \text{Federal Income Tax Rate})}$$

where A is the sum of the preferred stock component and the return on equity component, each as determined in Sections 2.(a)(ii) and for the ROE set forth in 2.(a)(iii) above

(c) State Income Tax shall equal

$$\frac{(A + \text{Federal Income Tax}) \times \text{State Income Tax Rate}}{(1 - \text{State Income Tax Rate})}$$

Where A is the sum of the preferred stock component and the return on equity component as determined in A.2.(a)(ii) and A.2.(a)(iii) above and Federal income Tax is determined in 2.(b) above.

B. Transmission Related Real Estate Tax Expense shall equal the Real Estate Tax Expenses multiplied by the Gross Plant Allocation Factor.

C. Transmission Related Amortization of Investment Tax Credits shall equal the electric Amortization of Investment Tax Credits multiplied by the Gross Transmission Plant Allocation Factor.

D. Transmission Related Payroll Tax Expense shall equal Payroll Taxes multiplied by the Transmission Wages and Salaries Allocation Factor.

E. Transmission Operation and Maintenance Expense shall equal the Transmission Operation and Maintenance Expense as previously defined.

F. Transmission Related Administrative and General Expenses shall equal the sum of the electric Administrative and General Expenses multiplied by the Transmission Wages and Salaries Allocation Factor.

G. Revenue Credits shall equal all Transmission revenue recorded in FERC account 456.

H. Transmission Related Bad Debt Expense shall equal Transmission Related Bad Debt Expense as previously defined.

A-14

SERVICE AGREEMENT NO. 2593

6. Other Requirements

At the request of Developer, this Agreement was executed prior to the completion of the Class Year Interconnection Facilities Study for Class Year 2019. As a result, the interconnection and operation of the Large Generating Facility may require the construction of CTOAFs, SUFs and/or System Deliverability Upgrades ("SDUs") in addition to the CTOAFs, Stand-Alone SUFs, and Other SUFs identified in this Appendix A.

If the CTOAFs, SUFs, or SDUs for Developer's Large Generating Facility identified in the Class Year Study for Class Year 2019 differ in any material way from the facilities identified in the Appendices to this Agreement, the Parties shall amend this Agreement after Developer has accepted its Project Cost Allocation for the Class Year, pursuant to Articles 29.11 and 29.12, to reflect the CTOAFs, SUFs, and SDUs identified in the Class Year Study for Class Year 2019.

A-15

SERVICE AGREEMENT NO. 2593

Figure A-1

(On following page)

A-16

SERVICE AGREEMENT NO. 2593

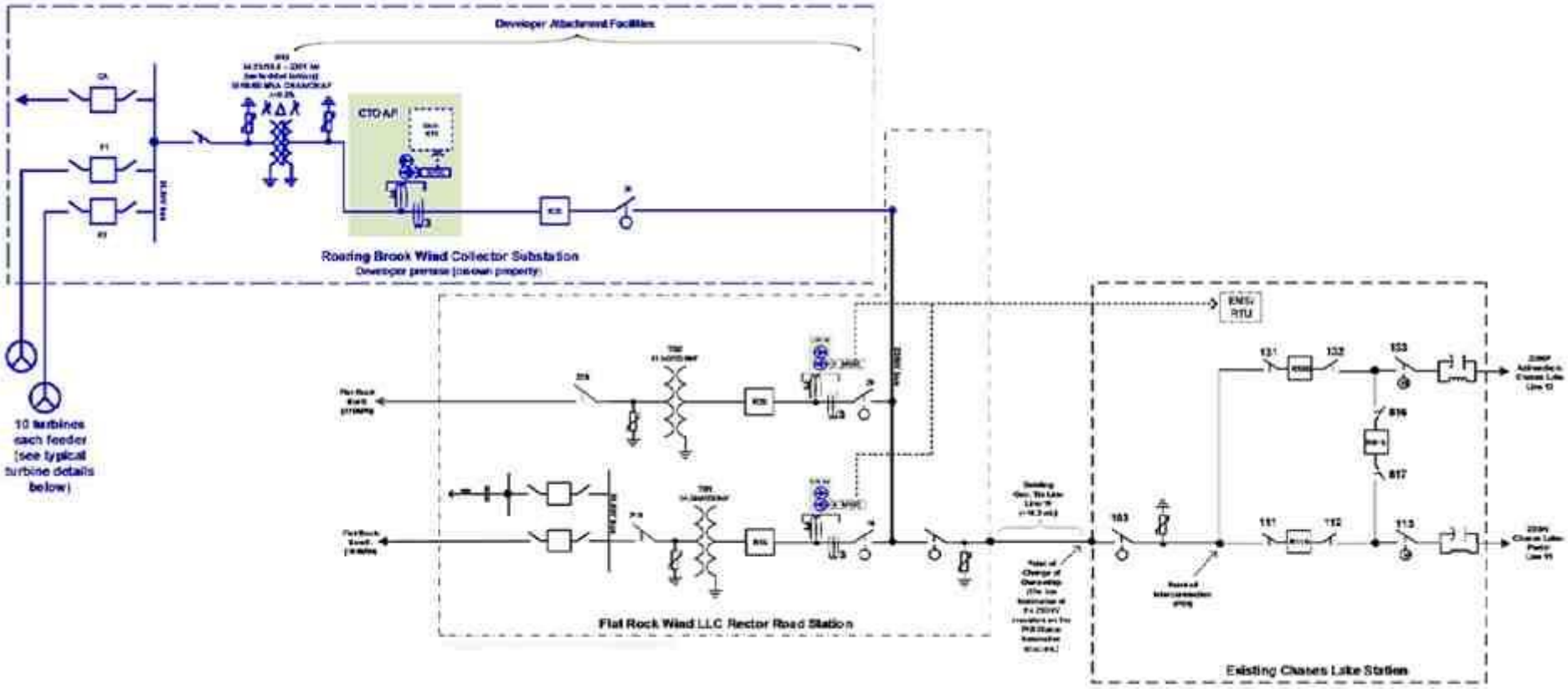

A-17

SERVICE AGREEMENT NO. 2593

APPENDIX B

MILESTONES

1. Selected Option Pursuant to Article 5.1

Developer has elected the Option to Build pursuant to Article 5.1.3 of this Agreement with respect to its responsibilities detailed in Appendix A regarding the Connecting Transmission Owner's Attachment Facilities located at the Roaring Brook Wind Collector Substation. Developer has elected to procure the metering units described in Section 1(b) of Appendix A in advance of the completion of the Facilities Study. Ownership of the metering units must be transferred to the Connecting Transmission Owner prior to the synchronization of the Large Generating Facility to the Connecting Transmission Owner's system

2. Milestones

Task	Milestone	Date	Responsible Party
1.	Execute engineering and procurement agreement	Completed	Connecting Transmission Owner/Developer
2.	Provide initial prepayment/security	Completed	Developer
3.	Issue written authorization to proceed with engineering	Completed	Developer
4.	Start engineering on DAFs	Completed	Developer
5.	Start engineering and design of CTOAFs and SUFs	Completed	Connecting Transmission Owner
6.	Start procurement for DAFs	Completed	Developer
7.	Initiate DAF engineering design submittals to Connecting Transmission Owner	Completed	Developer
8.	Start procurement of CTOAFs and SUFs	Completed	Developer/Connecting Transmission Owner
9.	15.	Start construction of DAFs	Complete engineering on DAFs (including CTO acceptance)
10.			Completed procurement for CTOAFs and SUFs
11.		Execute interconnection agreement	Ownership transfer of metering units from Developer to Transmission Owner
12.			Start construction of CTOAFs and SUFs
13.		Complete engineering of CTOAFs and SUFs	
14.			

Completed	Developer
01/2021	NYISO/ Connecting Transmission Owner/ Developer
02/2021	Connecting Transmission Owner
02/2021	Connecting Transmission Owner/ Developer
03/2021	Connecting Transmission Owner
02/2021	Developer/ Connecting Transmission Owner
02/2021	Connecting Transmission Owner

B-1

SERVICE AGREEMENT NO. 2593

16.	Complete procurement for DAFs	Completed	Developer
17.	Complete construction of DAFs	1/2021	Developer
18.	Complete construction of generation facilities	1/2021	Developer
19.	Complete construction of CTOAFs and SUFs	03/2021	Connecting Transmission Owner
20.	Complete filed verification and witness testing of DAFs	03/2021	Connecting Transmission Owner/Developer
21.	Initial Synchronization Date of Large Generating Facility	03/2021	Developer/Connecting Transmission Owner
22.	Large Generating Facility In Service Date	03/2021	Developer
23.	Submit DAF As Builts to CTO	04/2021	Developer
24.	Complete testing and commissioning of Large Generating Facility	04/2021	Developer
25.	Commercial Operations Date	04/2021	Developer
26.	Complete CTOAF and SUF As Builts	05/2021	Connecting Transmission Owner
27.	Complete review/acceptance of DAF As Builts	06/2021	Connecting Transmission Owner
28.	Complete project closeout	07/2021	Connecting Transmission Owner
29.	Issue final invoicing	08/2021	Connecting Transmission Owner

The interconnection schedule is contingent upon, but not limited to, outage scheduling, and the Developer's successful compliance with and timely completion of its obligations in this Agreement.

3. Security to Be Posted

As part of the engineering and procurement agreement entered into between Developer and Connecting Transmission Owner and superseded by this Agreement, Developer provided $530,000 in cash to Connecting Transmission Owner as prepayment concerning the Connecting Transmission Owner's Attachment Facilities. Connecting Transmission Owner and Developer agree that this cash provided by Developer satisfies Developer's Security requirements for Connecting Transmission Owner's Attachment Facilities pursuant to Section 11.5 of this Agreement, and Developer is not required to provide additional Security under this Agreement for Connecting Transmission Owner's Attachment Facilities.

	B-2		

SERVICE AGREEMENT NO. 2593

APPENDIX C

INTERCONNECTION DETAILS

1. Description of Large Generating Facility, including Point of Interconnection

The Large Generating Facility will be a 79.725 MW wind generation farm located in Lewis County, New York. The Large Generating Facility will consist of five (5) 2.625 MW wind turbines, three (3) 4.2 MW wind turbines, and twelve (12) 4.5 MW wind turbines, which will be collected together onto two (2) 34.5kV circuits back to the Roaring Brook Wind Collector Station using a mix of overhead and underground lines. The reactive power capability of the wind turbines is 0.95 lagging to 0.95 leading. The Roaring Brook Wind Collector Station is configured as an outdoor open air substation with two 38kV circuit breaker for protection of the collection system. Transformation to transmission voltage is through a wye grounded/ buried-delta/wye-grounded 230/34.5/13.1kV transformer. High side protection is via a single 230kV circuit breaker. The Roaring Brook Wind Collector Station will be adjacent to, and will share a fence line with, Flat Rock's Rector Road Substation. The stations will be connected by ~50FT of rigid bus bar. The Large Generating Facility will share and utilize the existing 230kV transmission line - Line 10 - from the Rector Road Substation to the Connecting Transmission Owner's Chases Lake Substation.

The Point of Interconnection ("POI") for the Large Generating Facility will be the Connecting Transmission Owner's Chases Lake Substation on the station side of switch 103. The Point of Interconnection is identified on the one-line diagram in Figure A-1 in Appendix A. The Point of Change of Ownership ("PCO") shall be at the existing line to bus terminal on the Chases Lake Substation termination structure. The Point of Change of Ownership is identified in Figure A-1 in Appendix A.

2. Developer Operating Requirements

a. Developer must comply with all applicable NYISO tariffs and procedures, as amended from time to time.

b. To the extent not inconsistent with the terms of this Agreement, the NYISO OATT, or applicable NYISO procedures, Developer must comply with Connecting Transmission Owner's operating instructions and requirements as referenced in Article 9.3 of this Agreement, which requirements shall include the dedicated data circuits, including system protection circuits, to be maintained by Developer in accordance with Article 8.1 of this Agreement. Developer must also comply with the applicable requirements as set out in the Connecting Transmission Owner's ESBs, which have been identified and provided to the Developer as amended from time to time to the extent not inconsistent with the terms of this Agreement or applicable NYISO tariffs and procedures. Upon the Connecting Transmission Owner's notice to the Developer of amendments to the ESBs, the Developer has 30 days to comply with such amendments.

c. Developer may not supply Unforced Capacity to the New York Control Area from the Large Generating Facility until Developer has complied with the deliverability

SERVICE AGREEMENT NO. 2593

requirements pursuant to Attachment S of the ISO OATT, including acceptance of any cost allocation for SDUs and the posting of associated security or payments.

C-2

SERVICE AGREEMENT NO. 2593

APPENDIX D

SECURITY ARRANGEMENTS DETAILS

Infrastructure security of New York State Transmission System equipment and operations and control hardware and software is essential to ensure day-to-day New York State Transmission System reliability and operational security. The Commission will expect the NYISO, all Transmission Owners, all Developers and all other Market Participants to comply with the recommendations offered by the President's Critical Infrastructure Protection Board and, eventually, best practice recommendations from the electric reliability authority. All public utilities will be expected to meet basic standards for system infrastructure and operational security, including physical, operational, and cyber-security practices.

D-1

SERVICE AGREEMENT NO. 2593

APPENDIX E-1

INITIAL SYCHRONIZATION DATE

[**Date**]

New York Independent System Operator, Inc.
Attn: Vice President, Operations
10 Krey Boulevard
Rensselaer, NY 12144

Niagara Mohawk Power Corporation
Attn: Director, Transmission Commercial Services
d/b/a National Grid
40 Sylvan Road
Waltham, MA 02541-1120

Re: Large Generating Facility

Dear :

On **[Date] [Developer]** initially synchronized the Large Generating Facility [specify units, if applicable]. This letter confirms [Developer]'s Initial Synchronization Date was [specify].

Thank you.

[**Signature**]

[**Developer Representative**]

E-1

SERVICE AGREEMENT NO. 2593

APPENDIX E-2

COMMERCIAL OPERATION DATE

[Date]

New York Independent System Operator, Inc.
Attn: Vice President, Operations
10 Krey Boulevard
Rensselaer, NY 12144

Niagara Mohawk Power Corporation
Attn: Director, Transmission Commercial Services
d/b/a National Grid
40 Sylvan Road
Waltham, MA 02541-1120

Re: _____ Large Generating Facility

Dear _____:

On **[Date] [Developer]** has completed Trial Operation of Unit No. ___. This letter confirms that [Developer] commenced Commercial Operation of Unit No. ___ at the Large Generating Facility, effective as of **[Date plus one day]**.

Thank you.

[Signature]

[Developer Representative]

E-2

SERVICE AGREEMENT NO. 2593

APPENDIX F

ADDRESSES FOR DELIVERY OF NOTICES AND BILLINGS

Notices:

NYISO:

Before commercial operation of the Large Generating Facility:

New York Independent System Operator, Inc.
Attn: Vice President, System and Resource Planning
10 Krey Boulevard
Rensselaer, NY 12144
Phone: (518) 356-6000
Fax: (518) 356-6118

After commercial operation of the Large Generating Facility:

New York Independent System Operator, Inc.
Attn: Vice President, Operations
10 Krey Boulevard
Rensselaer, NY 12144
Phone: (518) 356-6000
Fax: (518) 356-6118

Connecting Transmission Owner:

Niagara Mohawk Power Corporation d/b/a National Grid
Attn: Director, Transmission Commercial Services
40 Sylvan Road
Waltham, MA 02541-1120
Phone: (781) 907-2411
Fax: (315) 428-5114

Developer:

PPM Roaring Brook, LLC
Attn: Asset Manager, Roaring Brook Wind Project
1125 NW Couch St., Suite 700
Portland, OR 97209
Phone: (503) 796-7000

With a copy to:
PPM Roaring Brook, LLC

Attn: Contracts Administration
1125 NW Couch St., Suite 700

F-1

SERVICE AGREEMENT NO. 2593

Portland, OR 97209
Phone: (503) 796-7000

Billings and Payments:

Connecting Transmission Owner:

Niagara Mohawk Power Corporation d/b/a National Grid
Attn: Director, Transmission Commercial Services
40 Sylvan Road
Waltham, MA 02541-1120
Phone: (781) 907-2422
Fax: (315) 428-5114

Developer:

PPM Roaring Brook, LLC
Attn: Asset Manager, Roaring Brook Wind Project
1125 NW Couch St., Suite 700
Portland, OR 97209
Phone: (503) 796-7000

Alternative Forms of Delivery of Notices (telephone, facsimile or email):

NYISO:

Before commercial operation of the Large Generating Facility:

New York Independent System Operator, Inc.
Attn: Vice President, System and Resource Planning
10 Krey Boulevard
Rensselaer, NY 12144
Phone: (518) 356-6000
Fax: (518) 356-6118
E-mail: interconnectionsupport@nyiso.com

After commercial operation of the Large Generating Facility:

New York Independent System Operator, Inc.
Attn: Vice President, Operations
10 Krey Boulevard
Rensselaer, NY 12144
Phone: (518) 356-6000
Fax: (518) 356-6118
E-mail: interconnectionsupport@nyiso.com

F-2

SERVICE AGREEMENT NO. 2593

Connecting Transmission Owner:

Niagara Mohawk Power Corporation d/b/a National Grid
Attn: Director, Transmission Commercial Services
40 Sylvan Road
Waltham, MA 02541-1120
Phone: (781) 907-2411
Fax: (315) 428-5114
Email: Kevin.Reardon@nationalgrid.com

Developer:

PPM Roaring Brook, LLC
Attn: Asset Manager, Roaring Brook Wind Project
1125 NW Couch St., Suite 700
Portland, OR 97209
Phone: (503) 796-7000
Email: Rob.Batarags@avangrid.com

F-3