SERVICE AGREEMENT NO. 2646

SERVICE AGREEMENT NO. 2646

STANDARD SMALL GENERATOR

INTERCONNECTION AGREEMENT

AMONG THE

NEW YORK INDEPENDENT SYSTEM OPERATOR, INC.,

NIAGARA MOHAWK POWER CORPORATION

D/B/A NATIONAL GRID,

AND

SUNEAST HILLS SOLAR LLC

Dated as of September 7, 2021

(Hills Solar)

SERVICE AGREEMENT NO. 2646

TABLE OF CONTENTS

Article 1 Scope and Limitations of Agreement 5
1.1 Applicability 5
1.2 Purpose 5
1.3 Scope of Interconnection Service 5
1.4 Limitations 5
1.5 Responsibilities of the Parties 5
1.6 Parallel Operation Obligations 7
1.7 Metering 7
1.8 Reactive Power and Primary Frequency Response 8
1.9 Capitalized Terms 11

Article 2 Inspection, Testing, Authorization, and Right of Access 12
2.1 Equipment Testing and Inspection 12
2.2 Authorization Required Prior to Parallel Operation 12
2.3 Right of Access 13

Article 3 Effective Date, Term, Termination, and Disconnection 14
3.1 Effective Date 14
3.2 Term of Agreement 14
3.3 Termination 14
3.4 Temporary Disconnection 15

Article 4 Cost Responsibility for Interconnection Facilities and Distribution Upgrades 17
4.1 Interconnection Facilities 17
4.2 Distribution Upgrades 17

Article 5 Cost Responsibility for System Upgrade Facilities and System Deliverability Upgrades 18
5.1 Applicability 18
5.2 System Upgrades 18
5.3 Special Provisions for Affected Systems 18

Article 6 Billing, Payment, Milestones, and Financial Security 19
6.1 Billing and Payment Procedures and Final Accounting 19
6.2 Milestones 19
6.3 Financial Security Arrangements 20

Article 7 Assignment, Liability, Indemnity, Force Majeure, Consequential Damages, and Default 21
7.1 Assignment 21
7.2 Limitation of Liability 21
7.3 Indemnity 21
7.4 Consequential Damages 22

7.5 Force Majeure 23

SERVICE AGREEMENT NO. 2646

7.6 Breach and Default 23

Article 8 Insurance 25

Article 9 Confidentiality 26

Article 10 Disputes 28

Article 11 Taxes 29

Article 12 Miscellaneous 30
12.1 Governing Law, Regulatory Authority, and Rules 30
12.2 Amendment 30
12.3 No Third-Party Beneficiaries 30
12.4 Waiver 30
12.5 Entire Agreement 30
12.6 Multiple Counterparts 31
12.7 No Partnership 31
12.8 Severability 31
12.9 Security Arrangements 31
12.10 Environmental Releases 31
12.11 Subcontractors 31
12.12 Reservation of Rights 32

Article 13 Notices 33
13.1 General 33
13.2 Billing and Payment 33
13.3 Alternative Forms of Notice 34
13.4 Designated Operating Representative 35
13.5 Changes to the Notice Information 35

Article 14 Signatures 36

Attachment 1 Glossary of Terms

Attachment 2 Detailed Scope of Work, Including Description and Costs of the Small Generating Facility, Interconnection Facilities, and Metering Equipment

Attachment 3 One-line Diagram Depicting the Small Generating Facility, Interconnection Facilities, Metering Equipment, and Upgrades

Attachment 4 Milestones

Attachment 5 Additional Operating Requirements for the New York State Transmission System, the Distribution System and Affected Systems Needed to Support the Interconnection Customer's Needs

Attachment 6 Connecting Transmission Owner's Description of its Upgrades and Best Estimate of Upgrade Costs

Attachment 7 Insurance Coverage

2

SERVICE AGREEMENT NO. 2646

Attachment 8 Initial Synchronization Date

Attachment 9 Commercial Operation Date

3

SERVICE AGREEMENT NO. 2646

This Standard Small Generator Interconnection Agreement ("Agreement" or "SGIA") is made and entered into this 7th day of September, 2021, by and among the New York Independent System Operator, Inc., a not-for-profit corporation organized and existing under the laws of the State of New York ("NYISO"), Niagara Mohawk Power Corporation d/b/a National Grid, a corporation organized and existing under the laws of the State of New York ("Connecting Transmission Owner"), and SunEast Hills Solar LLC, a limited liability company organized and existing under the laws of the State of Delaware ("Interconnection Customer") each hereinafter sometimes referred to individually as "Party" or referred to collectively as the "Parties."

In consideration of the mutual covenants set forth herein, the Parties agree as follows:

4

SERVICE AGREEMENT NO. 2646

Article 1 Scope and Limitations of Agreement

1.1 Applicability

This Agreement shall be used for all Interconnection Requests submitted under the Small Generator Interconnection Procedures (SGIP) except for those submitted under the 10 kW Inverter Process contained in SGIP Attachment 5.

1.2 Purpose

This Agreement governs the terms and conditions under which the Interconnection Customer's Small Generating Facility will interconnect with, and operate in parallel with, the New York State Transmission System or the Distribution System.

1.3 Scope of Interconnection Service

1.3.1 The NYISO will provide Energy Resource Interconnection Service and Capacity Resource Interconnection Service to Interconnection Customer at the Point of Interconnection.

1.3.2 This Agreement does not constitute an agreement to purchase or deliver the Interconnection Customer's power. The purchase or delivery of power and other services that the Interconnection Customer may require will be covered under separate agreements, if any, or applicable provisions of NYISO's or Connecting Transmission Owner's tariffs. The Interconnection Customer will be responsible for separately making all necessary arrangements (including scheduling) for delivery of electricity in accordance with the applicable provisions of the ISO OATT and Connecting Transmission Owner's tariff. The execution of this Agreement does not constitute a request for, nor agreement to, provide Energy, any Ancillary Services or Installed Capacity under the NYISO Services Tariff or any Connecting Transmission Owner's tariff. If Interconnection Customer wishes to supply or purchase Energy, Installed Capacity or Ancillary Services, then Interconnection Customer will make application to do so in accordance with the NYISO Services Tariff or Connecting Transmission Owner's tariff.

1.4 Limitations

Nothing in this Agreement is intended to affect any other agreement by and among the NYISO, Connecting Transmission Owner and the Interconnection Customer, except as otherwise expressly provided herein.

1.5 Responsibilities of the Parties

1.5.1 The Parties shall perform all obligations of this Agreement in accordance with all Applicable Laws and Regulations, Operating Requirements, and Good Utility Practice.

5

1.5.2 The Interconnection Customer shall construct, interconnect, operate and maintain its Small Generating Facility and construct, operate, and maintain its Interconnection Facilities in accordance with the applicable manufacturer's recommended maintenance schedule, and in accordance with this Agreement, and with Good Utility Practice.

1.5.3 The Connecting Transmission Owner shall construct, operate, and maintain its Interconnection Facilities and Upgrades covered by this Agreement in accordance with this Agreement, and with Good Utility Practice. If all the Parties agree, the Interconnection Customer may construct the Connecting Transmission Owner's Interconnection Facilities and Upgrades as specified in Attachment 2.

1.5.4 The Interconnection Customer agrees to construct its facilities or systems in accordance with applicable specifications that meet or exceed those provided by the National Electrical Safety Code, the American National Standards Institute, IEEE, Underwriter's Laboratory, and Operating Requirements in effect at the time of construction and other applicable national and state codes and standards. The Interconnection Customer agrees to design, install, maintain, and operate its Small Generating Facility so as to reasonably minimize the likelihood of a disturbance adversely affecting or impairing the system or equipment of the Connecting Transmission Owner or Affected Systems.

1.5.5 The Connecting Transmission Owner and Interconnection Customer shall operate, maintain, repair, and inspect, and shall be fully responsible for the facilities that it now or subsequently may own unless otherwise specified in the Attachments to this Agreement. Each of those Parties shall be responsible for the safe installation, maintenance, repair and condition of their respective lines and appurtenances on their respective sides of the point of change of ownership. The Connecting Transmission Owner and the Interconnection Customer, as appropriate, shall provide Interconnection Facilities that adequately protect the Connecting Transmission Owner's electric system, personnel, and other persons from damage and injury. The allocation of responsibility for the design, installation, operation, maintenance and ownership of Interconnection Facilities shall be delineated in the Attachments to this Agreement.

1.5.6 The NYISO shall coordinate with all Affected Systems to support the interconnection. The Connecting Transmission Owner shall cooperate with the NYISO in these efforts.

1.5.7 The Interconnection Customer shall ensure "frequency ride through" capability and "voltage ride through" capability of its Small Generating Facility. The Interconnection Customer shall enable these capabilities such that its Small Generating Facility shall not disconnect automatically or instantaneously from the system or equipment of the Connecting Transmission Owner and any Affected Systems for a defined under-frequency or over-frequency condition, or an under-

voltage or over-voltage condition, as tested pursuant to section 2.1 of this agreement. The defined conditions shall be in accordance with Good Utility

Practice and consistent with any standards and guidelines that are applied to other generating facilities in the Balancing Authority Area on a comparable basis. The Small Generating Facility's protective equipment settings shall comply with the Transmission Owner's automatic load-shed program. The Transmission Owner shall review the protective equipment settings to confirm compliance with the automatic load-shed program. The term "ride through" as used herein shall mean the ability of a Small Generating Facility to stay connected to and synchronized with the system or equipment of the Transmission Owner and any Affected Systems during system disturbances within a range of conditions, in accordance with Good Utility Practice and consistent with any standards and guidelines that are applied to other generating facilities in the Balancing Authority on a comparable basis. The term "frequency ride through" as used herein shall mean the ability of a Small Generating Facility to stay connected to and synchronized with the system or equipment of the Transmission Owner and any Affected Systems during system disturbances within a range of under-frequency and over-frequency conditions, in accordance with Good Utility Practice and consistent with any standards and guidelines that are applied to other generating facilities in the Balancing Authority Area on a comparable basis. The term "voltage ride through" as used herein shall mean the ability of a Small Generating Facility to stay connected to and synchronized with the system or equipment of the Transmission Owner and any Affected Systems during system disturbances within a range of under-voltage and over-voltage conditions, in accordance with Good Utility Practice and consistent with any standards and guidelines that are applied to other generating facilities in the Balancing Authority Area on a comparable basis.

1.6 Parallel Operation Obligations

Once the Small Generating Facility has been authorized to commence parallel operation, the Interconnection Customer shall abide by all rules and procedures pertaining to the parallel operation of the Small Generating Facility in the applicable control area, including, but not limited to: (1) the rules and procedures concerning the operation of generation set forth in the NYISO tariffs or ISO Procedures or the Connecting Transmission Owner's tariff; (2) any requirements consistent with Good Utility Practice or that are necessary to ensure the safe and reliable operation of the Transmission System or Distribution System; and (3) the Operating Requirements set forth in Attachment 5 of this Agreement.

1.7 Metering

The Interconnection Customer shall be responsible for the Connecting Transmission Owner's reasonable and necessary cost for the purchase, installation, operation, maintenance, testing, repair, and replacement of metering and data acquisition equipment specified in Attachments 2 and 3 of this Agreement. The Interconnection Customer's metering (and data acquisition, as required) equipment shall conform to applicable industry rules and Operating Requirements.

SERVICE AGREEMENT NO. 2646

1.8 Reactive Power and Primary Frequency Response

1.8.1 Power Factor Design Criteria

1.8.1.1 Synchronous Generation. The Interconnection Customer shall design its Small Generating Facility to maintain a composite power delivery at continuous rated power output at the Point of Interconnection at a power factor within the range of 0.95 leading to 0.95 lagging, unless the NYISO or the Transmission Owner in whose Transmission District the Small Generating Facility interconnects has established different requirements that apply to all similarly situated generators in the New York Control Area or Transmission District (as applicable) on a comparable basis, in accordance with Good Utility Practice.

1.8.1.2 Non-Synchronous Generation. The Interconnection Customer shall design its Small Generating Facility to maintain a composite power delivery at continuous rated power output at the high-side of the generator substation at a power factor within the range of 0.95 leading to 0.95 lagging, unless the NYISO or the Transmission Owner in whose Transmission District the Small Generating Facility interconnects has established a different power factor range that applies to all similarly situated non-synchronous generators in the control area or Transmission District (as applicable) on a comparable basis, in accordance with Good Utility Practice. This power factor range standard shall be dynamic and can be met using, for example, power electronics designed to supply this level of reactive capability (taking into account any limitations due to voltage level, real power output, etc.) or fixed and switched capacitors, or a combination of the two. This requirement shall only apply to newly interconnecting non-synchronous generators that have not yet executed a Facilities Study Agreement as of September 21, 2016.

1.8.2 The NYISO is required to pay the Interconnection Customer for reactive power, or voltage support service, that the Interconnection Customer provides from the Small Generating Facility in accordance with Rate Schedule 2 of the NYISO Services Tariff.

1.8.3 Primary Frequency Response. Interconnection Customer shall ensure the primary frequency response capability of its Small Generating Facility by installing, maintaining, and operating a functioning governor or equivalent controls. The term “functioning governor or equivalent controls” as used herein shall mean the required hardware and/or software that provides frequency responsive real power control with the ability to sense changes in system frequency and autonomously adjust the Small Generating Facility’s real power output in accordance with the droop and deadband parameters and in the direction needed to correct frequency deviations. Interconnection Customer is required to install a governor or equivalent controls with the capability of operating: (1) with a maximum 5

percent droop and ±0.036 Hz deadband; or (2) in accordance with the relevant

droop, deadband, and timely and sustained response settings from an approved Applicable Reliability Standard providing for equivalent or more stringent parameters. The droop characteristic shall be: (1) based on the nameplate capacity of the Small Generating Facility, and shall be linear in the range of frequencies between 59 to 61 Hz that are outside of the deadband parameter; or (2) based on an approved Applicable Reliability Standard providing for an equivalent or more stringent parameter. The deadband parameter shall be: the range of frequencies above and below nominal (60 Hz) in which the governor or equivalent controls is not expected to adjust the Small Generating Facility's real power output in response to frequency deviations. The deadband shall be implemented: (1) without a step to the droop curve, that is, once the frequency deviation exceeds the deadband parameter, the expected change in the Small Generating Facility's real power output in response to frequency deviations shall start from zero and then increase (for under-frequency deviations) or decrease (for over-frequency deviations) linearly in proportion to the magnitude of the frequency deviation; or (2) in accordance with an approved Applicable Reliability Standard providing for an equivalent or more stringent parameter. Interconnection Customer shall notify NYISO that the primary frequency response capability of the Small Generating Facility has been tested and confirmed during commissioning. Once Interconnection Customer has synchronized the Small Generating Facility with the New York State Transmission System, Interconnection Customer shall operate the Small Generating Facility consistent with the provisions specified in Articles 1.8.3.1 and 1.8.3.2 of this Agreement. The primary frequency response requirements contained herein shall apply to both synchronous and non-synchronous Small Generating Facilities.

1.8.3.1 Governor or Equivalent Controls. Whenever the Small Generating Facility is operated in parallel with the New York State Transmission System, Interconnection Customer shall operate the Small Generating Facility with its governor or equivalent controls in service and responsive to frequency. Interconnection Customer shall: (1) in coordination with NYISO, set the deadband parameter to: (1) a maximum of ±0.036 Hz and set the droop parameter to a maximum of 5 percent; or (2) implement the relevant droop and deadband settings from an approved Applicable Reliability Standard that provides for equivalent or more stringent parameters. Interconnection Customer shall be required to provide the status and settings of the governor and equivalent controls to NYISO and/or the Connecting Transmission Owner upon request. If Interconnection Customer needs to operate the Small Generating Facility with its governor or equivalent controls not in service, Interconnection Customer shall immediately notify NYISO and the Connecting Transmission Owner, and provide both with the following information: (1) the operating status of the governor or equivalent controls (*i.e.*, whether it is currently out of service or when it will be taken out of service); (2) the reasons for removing the governor or

equivalent controls from service; and (3) a reasonable estimate of when the governor or equivalent controls will be returned to service.

Interconnection Customer shall make Reasonable Efforts to return its governor or equivalent controls into service as soon as practicable. Interconnection Customer shall make Reasonable Efforts to keep outages of the Small Generating Facility's governor or equivalent controls to a minimum whenever the Small Generating Facility is operated in parallel with the New York State Transmission System.

1.8.3.2 Timely and Sustained Response. Interconnection Customer shall ensure that the Small Generating Facility's real power response to sustained frequency deviations outside of the deadband setting is automatically provided and shall begin immediately after frequency deviates outside of the deadband, and to the extent the Small Generating Facility has operating capability in the direction needed to correct the frequency deviation. Interconnection Customer shall not block or otherwise inhibit the ability of the governor or equivalent controls to respond and shall ensure that the response is not inhibited, except under certain operational constraints including, but not limited to, ambient temperature limitations, physical energy limitations, outages of mechanical equipment, or regulatory requirements. The Small Generating Facility shall sustain the real power response at least until system frequency returns to a value within the deadband setting of the governor or equivalent controls. An Applicable Reliability Standard with equivalent or more stringent requirements shall supersede the above requirements.

1.8.3.3 Exemptions. Small Generating Facilities that are regulated by the United States Nuclear Regulatory Commission shall be exempt from Articles 1.8.3, 1.8.3.1, and 1.8.3.2 of this Agreement. Small Generating Facilities that are behind the meter generation that is sized-to-load (*i.e.*, the thermal load and the generation are near-balanced in real-time operation and the generation is primarily controlled to maintain the unique thermal, chemical, or mechanical output necessary for the operating requirements of its host facility) shall be required to install primary frequency response capability requirements in accordance with the droop and deadband capability requirements specified in Article 1.8.3, but shall be otherwise exempt from the operating requirements in Articles 1.8.3, 1.8.3.1, 1.8.3.2, and 1.8.3.4 of this Agreement.

1.8.3.4 Electric Storage Resources. Interconnection Customer interconnecting an electric storage resource shall establish an operating range in Attachment 5 of its SGIA that specifies a minimum state of charge and a maximum state of charge between which the electric storage resource will be required to provide primary frequency response consistent with the conditions set forth in Articles 1.8.3, 1.8.3.1, 1.8.3.2, and 1.8.3.3 of this Agreement. Attachment 5 shall specify whether the operating range is static or dynamic, and shall consider (1) the expected magnitude of frequency

deviations in the interconnection; (2) the expected duration that system frequency will remain outside of the deadband parameter in the

interconnection; (3) the expected incidence of frequency deviations outside of the deadband parameter in the interconnection; (4) the physical capabilities of the electric storage resource; (5) operational limitations of the electric storage resources due to manufacturer specification; and (6) any other relevant factors agreed to by the NYISO, Connecting Transmission Owner, and Interconnection Customer. If the operating range is dynamic, then Attachment 5 must establish how frequently the operating range will be reevaluated and the factors that may be considered during its reevaluation.

Interconnection Customer's electric storage resource is required to provide timely and sustained primary frequency response consistent with Article 1.8.3.2 of this Agreement when it is online and dispatched to inject electricity to the New York State Transmission System and/or receive electricity from the New York State Transmission System. This excludes circumstances when the electric storage resource is not dispatched to inject electricity to the New York State Transmission System and/or dispatched to receive electricity from the New York State Transmission System. If Interconnection Customer's electric storage resource is charging at the time of a frequency deviation outside of its deadband parameter, it is to increase (for over-frequency deviations) or decrease (for under-frequency deviations) the rate at which it is charging in accordance with its droop parameter. Interconnection Customer's electric storage resource is not required to change from charging to discharging, or vice versa, unless the response necessitated by the droop and deadband settings requires it to do so and it is technically capable of making such a transition.

1.9 Capitalized Terms

Capitalized terms used herein shall have the meanings specified in the Glossary of Terms in Attachment 1 or the body of this Agreement. Capitalized terms used herein that are not so defined shall have the meanings specified in Appendix 1 of Attachment Z, Section 25.1.2 of Attachment S, or Section 30.1 of Attachment X of the ISO OATT.

SERVICE AGREEMENT NO. 2646

Article 2 Inspection, Testing, Authorization, and Right of Access

2.1 Equipment Testing and Inspection

2.1.1 The Interconnection Customer shall test and inspect its Small Generating Facility and Interconnection Facilities prior to interconnection. The Interconnection Customer shall notify the NYISO and the Connecting Transmission Owner of such activities no fewer than five Business Days (or as may be agreed to by the Parties) prior to such testing and inspection. Testing and inspection shall occur on a Business Day. The Connecting Transmission Owner may, at its own expense, send qualified personnel to the Small Generating Facility site to inspect the interconnection and observe the testing. The Interconnection Customer shall provide the NYISO and Connecting Transmission Owner a written test report when such testing and inspection is completed. The Small Generating Facility may not commence parallel operations if the NYISO, in consultation with the Connecting Transmission Owner, finds that the Small Generating Facility has not been installed as agreed upon or may not be operated in a safe and reliable manner.

2.1.2 The NYISO and Connecting Transmission Owner shall each provide the Interconnection Customer written acknowledgment that it has received the Interconnection Customer's written test report. Such written acknowledgment shall not be deemed to be or construed as any representation, assurance, guarantee, or warranty by the NYISO or Connecting Transmission Owner of the safety, durability, suitability, or reliability of the Small Generating Facility or any associated control, protective, and safety devices owned or controlled by the Interconnection Customer or the quality of power produced by the Small Generating Facility.

2.2 Authorization Required Prior to Parallel Operation

2.2.1 The NYISO, in consultation with the Connecting Transmission Owner, shall use Reasonable Efforts to list applicable parallel Operating Requirements in Attachment 5 of this Agreement. Additionally, the NYISO, in consultation with the Connecting Transmission Owner, shall notify the Interconnection Customer of any changes to these requirements as soon as they are known. The NYISO and Connecting Transmission Owner shall make Reasonable Efforts to cooperate with the Interconnection Customer in meeting requirements necessary for the Interconnection Customer to commence parallel operations by the in-service date.

2.2.2 The Interconnection Customer shall not operate its Small Generating Facility in parallel with the New York State Transmission System or the Distribution System without prior written authorization of the NYISO. The NYISO, in consultation with the Connecting Transmission Owner, will provide such authorization once the NYISO receives notification that the Interconnection

Customer has complied with all applicable parallel Operating Requirements. Such authorization shall not be unreasonably withheld, conditioned, or delayed.

SERVICE AGREEMENT NO. 2646

2.3 Right of Access

2.3.1 Upon reasonable notice, the NYISO and/or Connecting Transmission Owner may send a qualified person to the premises of the Interconnection Customer at or immediately before the time the Small Generating Facility first produces energy to inspect the interconnection, and observe the commissioning of the Small Generating Facility (including any required testing), startup, and operation for a period of up to three Business Days after initial start-up of the unit. In addition, the Interconnection Customer shall notify the NYISO and Connecting Transmission Owner at least five Business Days prior to conducting any on-site verification testing of the Small Generating Facility.

2.3.2 Following the initial inspection process described above, at reasonable hours, and upon reasonable notice, or at any time without notice in the event of an emergency or hazardous condition, the NYISO and Connecting Transmission Owner each shall have access to the Interconnection Customer's premises for any reasonable purpose in connection with the performance of the obligations imposed on them by this Agreement or if necessary to meet their legal obligation to provide service to their customers.

2.3.3 Each Party shall be responsible for its own costs associated with following this article.

SERVICE AGREEMENT NO. 2646

Article 3 Effective Date, Term, Termination, and Disconnection

3.1 Effective Date

This Agreement shall become effective upon execution by the Parties subject to acceptance by FERC (if applicable), or if filed unexecuted, upon the date specified by the FERC. The NYISO and Connecting Transmission Owner shall promptly file, or cause to be filed, this Agreement with FERC upon execution, if required. If the Agreement is disputed and the Interconnection Customer requests that it be filed with FERC in an unexecuted form, the NYISO shall file, or cause to be filed, this Agreement and the NYISO shall identify the disputed language.

3.2 Term of Agreement

This Agreement shall become effective on the Effective Date and shall remain in effect for a period of twenty (20) years from the Effective Date and shall be automatically renewed for each successive one-year period thereafter, unless terminated earlier in accordance with article 3.3 of this Agreement.

3.3 Termination

No termination shall become effective until the Parties have complied with all Applicable Laws and Regulations applicable to such termination, including the filing with FERC of a notice of termination of this Agreement (if required), which notice has been accepted for filing by FERC.

3.3.1 The Interconnection Customer may terminate this Agreement at any time by giving the NYISO and Connecting Transmission Owner 20 Business Days written notice. The NYISO may terminate this Agreement after the Small Generating Facility is Retired.

3.3.2 Any Party may terminate this Agreement after Default pursuant to article 7.6.

3.3.3 Upon termination of this Agreement, the Small Generating Facility will be disconnected from the New York State Transmission System or the Distribution System, as applicable. All costs required to effectuate such disconnection shall be borne by the terminating Party, unless such termination resulted from the nonterminating Party's Default of this SGIA or such non-terminating Party otherwise is responsible for these costs under this SGIA.

3.3.4 The termination of this Agreement shall not relieve any Party of its liabilities and obligations, owed or continuing at the time of the termination. The Interconnection Customer shall pay all amounts in excess of any deposit or other security without interest within 30 calendar days after receipt of the invoice for such amounts. If the deposit or other security exceeds the invoice, the Connecting Transmission Owner shall refund such excess within 30 calendar

days of the invoice without interest. If the Interconnection Customer disputes an amount to be paid the Interconnection Customer shall pay the disputed amount to

the Connecting Transmission Owner or into an interest bearing escrow account, pending resolution of the dispute in accordance with Article 10 of this Agreement. To the extent the dispute is resolved in the Interconnection Customer's favor, that portion of the disputed amount will be returned to the Interconnection Customer with interest at rates applicable to refunds under the Commission's regulations. To the extent the dispute is resolved in the Connecting Transmission Owner's favor, that portion of any escrowed funds and interest will be released to the Connecting Transmission Owner.

3.3.5 The limitations of liability, indemnification and confidentiality provisions of this Agreement shall survive termination or expiration of this Agreement.

3.4 Temporary Disconnection

Temporary disconnection shall continue only for so long as reasonably necessary under Good Utility Practice.

3.4.1 Emergency Conditions

"Emergency Condition" shall mean a condition or situation: (1) that in the judgment of the Party making the claim is imminently likely to endanger life or property; or (2) that, in the case of the NYISO or Connecting Transmission Owner, is imminently likely (as determined in a non-discriminatory manner) to cause a material adverse effect on the security of, or damage to the New York State Transmission System or Distribution System, the Connecting Transmission Owner's Interconnection Facilities or the electric systems of others to which the New York State Transmission System or Distribution System is directly connected; or (3) that, in the case of the Interconnection Customer, is imminently likely (as determined in a non-discriminatory manner) to cause a material adverse effect on the security of, or damage to, the Small Generating Facility or the Interconnection Customer's Interconnection Facilities. Under Emergency Conditions, the NYISO or Connecting Transmission Owner may immediately suspend interconnection service and temporarily disconnect the Small Generating Facility. The NYISO or Connecting Transmission Owner shall notify the Interconnection Customer promptly when it becomes aware of an Emergency Condition that may reasonably be expected to affect the Interconnection Customer's operation of the Small Generating Facility. The Interconnection Customer shall notify the NYISO and Connecting Transmission Owner promptly when it becomes aware of an Emergency Condition that may reasonably be expected to affect the New York State Transmission System or Distribution System or any Affected Systems. To the extent information is known, the notification shall describe the Emergency Condition, the extent of the damage or deficiency, the expected effect on the operation of each Party's facilities and operations, its anticipated duration, and the necessary corrective action.

3.4.2 Routine Maintenance, Construction, and Repair

The NYISO or Connecting Transmission Owner may interrupt interconnection service or curtail the output of the Small Generating Facility and temporarily disconnect the Small

Generating Facility from the New York State Transmission System or Distribution System when necessary for routine maintenance, construction, and repairs on the New York State

Transmission System or Distribution System. The NYISO or the Connecting Transmission Owner shall provide the Interconnection Customer with five Business Days notice prior to such interruption. The NYISO and Connecting Transmission Owner shall use Reasonable Efforts to coordinate such reduction or temporary disconnection with the Interconnection Customer.

3.4.3 Forced Outages

During any forced outage, the NYISO or Connecting Transmission Owner may suspend interconnection service to the Interconnection Customer to effect immediate repairs on the New York State Transmission System or the Distribution System. The NYISO shall use Reasonable Efforts to provide the Interconnection Customer with prior notice. If prior notice is not given, the NYISO shall, upon request, provide the Interconnection Customer written documentation after the fact explaining the circumstances of the disconnection.

3.4.4 Adverse Operating Effects

The NYISO or Connecting Transmission Owner shall notify the Interconnection Customer as soon as practicable if, based on Good Utility Practice, operation of the Small Generating Facility may cause disruption or deterioration of service to other customers served from the same electric system, or if operating the Small Generating Facility could cause damage to the New York State Transmission System, the Distribution System or Affected Systems, or if disconnection is otherwise required under Applicable Reliability Standards or the ISO OATT. Supporting documentation used to reach the decision to disconnect shall be provided to the Interconnection Customer upon request. If, after notice, the Interconnection Customer fails to remedy the adverse operating effect within a reasonable time, the NYISO or Connecting Transmission Owner may disconnect the Small Generating Facility. The NYISO or Connecting Transmission Owner shall provide the Interconnection Customer with five Business Day notice of such disconnection, unless the provisions of article 3.4.1 apply.

3.4.5 Modification of the Small Generating Facility

The Interconnection Customer must receive written authorization from the NYISO and Connecting Transmission Owner before making any change to the Small Generating Facility that may have a material impact on the safety or reliability of the New York State Transmission System or the Distribution System. Such authorization shall not be unreasonably withheld. Modifications shall be done in accordance with Good Utility Practice. If the Interconnection Customer makes such modification without the prior written authorization of the NYISO and Connecting Transmission Owner, the Connecting Transmission Owner shall have the right to temporarily disconnect the Small Generating Facility. If disconnected, the Small Generating Facility will not be reconnected until the unauthorized modifications are authorized or removed.

3.4.6 Reconnection

The Parties shall cooperate with each other to restore the Small Generating Facility, Interconnection Facilities, and the New York State Transmission System and Distribution

System to their normal operating state as soon as reasonably practicable following a temporary disconnection.

SERVICE AGREEMENT NO. 2646

Article 4 Cost Responsibility for Interconnection Facilities and Distribution Upgrades

4.1 Interconnection Facilities

4.1.1 The Interconnection Customer shall pay for the cost of the Interconnection Facilities itemized in Attachment 2 of this Agreement. The NYISO, in consultation with the Connecting Transmission Owner, shall provide a best estimate cost, including overheads, for the purchase and construction of its Interconnection Facilities and provide a detailed itemization of such costs. Costs associated with Interconnection Facilities may be shared with other entities that may benefit from such facilities by agreement of the Interconnection Customer, such other entities, the NYISO, and the Connecting Transmission Owner.

4.1.2 The Interconnection Customer shall be responsible for its share of all reasonable expenses, including overheads, associated with (1) owning, operating, maintaining, repairing, and replacing its own Interconnection Facilities, and (2) operating, maintaining, repairing, and replacing the Connecting Transmission Owner's Interconnection Facilities, as set forth in Attachment 2 to this Agreement.

4.2 Distribution Upgrades

The Connecting Transmission Owner shall design, procure, construct, install, and own the Distribution Upgrades described in Attachment 6 of this Agreement. If the Connecting Transmission Owner and the Interconnection Customer agree, the Interconnection Customer may construct Distribution Upgrades. The actual cost of the Distribution Upgrades, including overheads, shall be directly assigned to the Interconnection Customer. The Interconnection Customer shall be responsible for its share of all reasonable expenses, including overheads, associated with owning, operating, maintaining, repairing, and replacing the Distribution Upgrades, as set forth in Attachment 6 to this Agreement.

SERVICE AGREEMENT NO. 2646

Article 5 Cost Responsibility for System Upgrade Facilities and System Deliverability Upgrades

5.1 Applicability

No portion of this article 5 shall apply unless the interconnection of the Small Generating Facility requires System Upgrade Facilities or System Deliverability Upgrades.

5.2 System Upgrades

The Connecting Transmission Owner shall procure, construct, install, and own the System Upgrade Facilities and System Deliverability Upgrades described in Attachment 6 of this Agreement. To the extent that design work is necessary in addition to that already accomplished in the Class Year Interconnection Facilities Study for the Interconnection Customer, the Connecting Transmission Owner shall perform or cause to be performed such work. If all the Parties agree, the Interconnection Customer may construct System Upgrade Facilities and System Deliverability Upgrades.

5.2.1 As described in Section 32.3.5.3 of the SGIP in Attachment Z of the ISO OATT, the responsibility of the Interconnection Customer for the cost of the System Upgrade Facilities and System Deliverability Upgrades described in Attachment 6 of this Agreement shall be determined in accordance with Attachment S of the ISO OATT, as required by Section 32.3.5.3.2 of Attachment Z. The Interconnection Customer shall be responsible for all System Upgrade Facility costs as required by Section 32.3.5.3.2 of Attachment Z or its share of any System Upgrade Facilities and System Deliverability Upgrades costs resulting from the final Attachment S process, as applicable, and Attachment 6 to this Agreement shall be revised accordingly.

5.2.2 Pending the outcome of the Attachment S cost allocation process, if applicable, the Interconnection Customer may elect to proceed with the interconnection of its Small Generating Facility in accordance with Section 32.3.5.3 of the SGIP.

5.3 Special Provisions for Affected Systems

For the repayment of amounts advanced to the Affected System Operator for System Upgrade Facilities or System Deliverability Upgrades, the Interconnection Customer and Affected System Operator shall enter into an agreement that provides for such repayment, but only if responsibility for the cost of such System Upgrade Facilities is not to be allocated in accordance with Attachment S of the ISO OATT. The agreement shall specify the terms governing payments to be made by the Interconnection Customer to the Affected System Operator as well as the repayment by the Affected System Operator.

SERVICE AGREEMENT NO. 2646

Article 6 Billing, Payment, Milestones, and Financial Security

6.1 Billing and Payment Procedures and Final Accounting

6.1.1 The Connecting Transmission Owner shall bill the Interconnection Customer for the design, engineering, construction, and procurement costs of Interconnection Facilities and Upgrades contemplated by this Agreement on a monthly basis, or as otherwise agreed by those Parties and as set forth in Section 2 of Attachment 4 of this Agreement. The Interconnection Customer shall pay all invoice amounts within 30 calendar days after receipt of the invoice.

6.1.2 Within three months of completing the construction and installation of the Connecting Transmission Owner's Interconnection Facilities and/or Upgrades described in the Attachments to this Agreement, the Connecting Transmission Owner shall provide the Interconnection Customer with a final accounting report of any difference between (1) the Interconnection Customer's cost responsibility for the actual cost of such facilities or Upgrades, and (2) the Interconnection Customer's previous aggregate payments to the Connecting Transmission Owner for such facilities or Upgrades. If the Interconnection Customer's cost responsibility exceeds its previous aggregate payments, the Connecting Transmission Owner shall invoice the Interconnection Customer for the amount due and the Interconnection Customer shall make payment to the Connecting Transmission Owner within 30 calendar days. If the Interconnection Customer's previous aggregate payments exceed its cost responsibility under this Agreement, the Connecting Transmission Owner shall refund to the Interconnection Customer an amount equal to the difference within 30 calendar days of the final accounting report.

6.1.3 If the Interconnection Customer disputes an amount to be paid, the Interconnection Customer shall pay the disputed amount to the Connecting Transmission Owner or into an interest bearing escrow account, pending resolution of the dispute in accordance with Article 10 of this Agreement. To the extent the dispute is resolved in the Interconnection Customer's favor, that portion of the disputed amount will be credited or returned to the Interconnection Customer with interest at rates applicable to refunds under the Commission's regulations. To the extent the dispute is resolved in the Connecting Transmission Owner's favor, that portion of any escrowed funds and interest will be released to the Connecting Transmission Owner.

6.2 Milestones

Subject to the provisions of the SGIP, the Parties shall agree on milestones for which each Party is responsible and list them in Attachment 4 of this Agreement. A Party's obligations under this provision may be extended by agreement. If a Party anticipates that it will be unable to meet a milestone for any reason other than a Force Majeure event, it shall immediately notify

the other Parties of the reason(s) for not meeting the milestone and: (1) propose the earliest reasonable alternate date by which it can attain this and future milestones, and (2) requesting

appropriate amendments to Attachment 4. The Party affected by the failure to meet a milestone shall not unreasonably withhold agreement to such an amendment unless: (1) it will suffer significant uncompensated economic or operational harm from the delay, (2) attainment of the same milestone has previously been delayed, or (3) it has reason to believe that the delay in meeting the milestone is intentional or unwarranted notwithstanding the circumstances explained by the Party proposing the amendment.

6.3 Financial Security Arrangements

At least 20 Business Days prior to the commencement of the design, procurement, installation, or construction of a discrete portion of the Connecting Transmission Owner's Interconnection Facilities and Upgrades, the Interconnection Customer shall provide the Connecting Transmission Owner, at the Interconnection Customer's option, a guarantee, a surety bond, letter of credit or other form of security that is reasonably acceptable to the Connecting Transmission Owner and is consistent with the Uniform Commercial Code of the jurisdiction where the Point of Interconnection is located. Such security for payment shall be in an amount sufficient to cover the costs for constructing, designing, procuring, and installing the applicable portion of the Connecting Transmission Owner's Interconnection Facilities and Upgrades and shall be reduced on a dollar-for-dollar basis for payments made to the Connecting Transmission Owner under this Agreement during its term. The Connecting Transmission Owner may draw on any such security to the extent that the Interconnection Customer fails to make any payments due under this Agreement. In addition:

6.3.1 The guarantee must be made by an entity that meets the creditworthiness requirements of the Connecting Transmission Owner, and contain terms and conditions that guarantee payment of any amount that may be due from the Interconnection Customer, up to an agreed-to maximum amount.

6.3.2 The letter of credit or surety bond must be issued by a financial institution or insurer reasonably acceptable to the Connecting Transmission Owner and must specify a reasonable expiration date.

6.3.3 Notwithstanding the above, Security posted for System Upgrade Facilities for a Small Generating Facility required to enter the Class Year process, or cash or Security provided for System Deliverability Upgrades, shall meet the requirements for Security contained in Attachment S to the ISO OATT.

SERVICE AGREEMENT NO. 2646

Article 7 Assignment, Liability, Indemnity, Force Majeure, Consequential Damages, and Default

7.1 Assignment

This Agreement, and each and every term and condition hereof, shall be binding upon and inure to the benefit of the Parties hereto and their respective successors and assigns. This Agreement may be assigned by any Party upon 15 Business Days prior written notice and opportunity to object by the other Parties; provided that:

7.1.1 A Party may assign this Agreement without the consent of the other Parties to any affiliate of the assigning Party with an equal or greater credit rating and with the legal authority and operational ability to satisfy the obligations of the assigning Party under this Agreement, provided that the Interconnection Customer promptly notifies the NYISO and the Connecting Transmission Owner of any such assignment. A Party may assign this Agreement without the consent of the other Parties in connection with the sale, merger, restructuring, or transfer of a substantial portion of all of its assets, including the Interconnection Facilities it owns, so long as the assignee in such a transaction directly assumes all rights, duties and obligation arising under this Agreement.

7.1.2 The Interconnection Customer shall have the right to assign this Agreement, without the consent of the NYISO or Connecting Transmission Owner, for collateral security purposes to aid in providing financing for the Small Generating Facility.

7.1.3 Any attempted assignment that violates this article is void and ineffective. Assignment shall not relieve a Party of its obligations, nor shall a Party's obligations be enlarged, in whole or in part, by reason thereof. An assignee is responsible for meeting the same financial, credit, and insurance obligations as the Interconnection Customer. Where required, consent to assignment will not be unreasonably withheld, conditioned or delayed.

7.2 Limitation of Liability

Each Party's liability to the other Parties for any loss, cost, claim, injury, liability, or expense, including reasonable attorney's fees, relating to or arising from any act or omission in its performance of this Agreement, shall be limited to the amount of direct damage actually incurred. In no event shall any Party be liable to the other Parties for any indirect, special, consequential, or punitive damages.

7.3 Indemnity

7.3.1 This provision protects each Party from liability incurred to third parties as a result of carrying out the provisions of this Agreement. Liability under this provision is exempt from the general limitations on liability found in article 7.2.

7.3.2 Each Party (the "Indemnifying Party") shall at all times indemnify, defend, and hold harmless the other Parties (each an " Indemnified Party") from, any and all damages, losses, claims, including claims and actions relating to injury to or death of any person or damage to property, the alleged violation of any Environmental Law, or the release or threatened release of any Hazardous Substance, demand, suits, recoveries, costs and expenses, court costs, attorney fees, and all other obligations by or to third parties (any and all of these a "Loss"), arising out of or resulting from: (i) the Indemnified Party's performance under this Agreement on behalf of the Indemnifying Party, except in cases where the Indemnifying Party can demonstrate that the Loss of the Indemnified Party was caused by the gross negligence or intentional wrongdoing by the Indemnified Party, or (ii) the violation by the Indemnifying Party of any Environmental Law or the release by the Indemnifying Party of a Hazardous Substance.

7.3.3 If a Party is entitled to indemnification under this article as a result of a claim by a third party, and the Indemnifying Party fails, after notice and reasonable opportunity to proceed under this article, to assume the defense of such claim, such Indemnified Party may at the expense of the Indemnifying Party contest, settle or consent to the entry of any judgment with respect to, or pay in full, such claim.

7.3.4 If an Indemnifying Party is obligated to indemnify and hold any Indemnified Party harmless under this article, the amount owing to the Indemnified Party shall be the amount of such Indemnified Party's actual loss, net of any insurance or other recovery.

7.3.5 Promptly after receipt by an Indemnified Party of any claim or notice of the commencement of any action or administrative or legal proceeding or investigation as to which the indemnity provided for in this article may apply, the Indemnified Party shall notify the Indemnifying Party of such fact. Any failure of or delay in such notification shall not affect a Party's indemnification obligation unless such failure or delay is materially prejudicial to the Indemnifying Party.

7.4 Consequential Damages

Other than as expressly provided for in this Agreement, no Party shall be liable under any provision of this Agreement for any losses, damages, costs or expenses for any special, indirect, incidental, consequential, or punitive damages, including but not limited to loss of profit or revenue, loss of the use of equipment, cost of capital, cost of temporary equipment or services, whether based in whole or in part in contract, in tort, including negligence, strict liability, or any other theory of liability; provided, however, that damages for which a Party may be liable to another Party under another agreement will not be considered to be special, indirect, incidental, or consequential damages hereunder.

22

SERVICE AGREEMENT NO. 2646

7.5 Force Majeure

7.5.1 As used in this article, a "Force Majeure Event" shall mean "any act of God, labor disturbance, act of the public enemy, war, insurrection, riot, fire, storm or flood, explosion, breakage or accident to machinery or equipment, any order, regulation or restriction imposed by governmental, military or lawfully established civilian authorities, or any other cause beyond a Party's control. A Force Majeure Event does not include an act of negligence or intentional wrongdoing." For the purposes of this article, this definition of Force Majeure shall supersede the definitions of Force Majeure set out in Section 32.10.1 of the ISO OATT.

7.5.2 If a Force Majeure Event prevents a Party from fulfilling any obligations under this Agreement, the Party affected by the Force Majeure Event ("Affected Party") shall promptly notify the other Parties, either in writing or via the telephone, of the existence of the Force Majeure Event. The notification must specify in reasonable detail the circumstances of the Force Majeure Event, its expected duration, and the steps that the Affected Party is taking to mitigate the effects of the event on its performance. The Affected Party shall keep the other Parties informed on a continuing basis of developments relating to the Force Majeure Event until the event ends. The Affected Party will be entitled to suspend or modify its performance of obligations under this Agreement (other than the obligation to make payments) only to the extent that the effect of the Force Majeure Event cannot be mitigated by the use of Reasonable Efforts. The Affected Party will use Reasonable Efforts to resume its performance as soon as possible.

7.6 Breach and Default

7.6.1 No Breach of this Agreement shall exist where such failure to discharge an obligation (other than the payment of money) is the result of a Force Majeure Event or the result of an act or omission of the other Parties. Upon a Breach, the non-breaching Party shall give written notice of such Breach to the Breaching Party. Except as provided in article 7.6.2, the Breaching Party shall have 60 calendar days from receipt of the Breach notice within which to cure such Breach; provided however, if such Breach is not capable of cure within 60 calendar days, the Breaching Party shall commence such cure within 20 calendar days after notice and continuously and diligently complete such cure within six months from receipt of the Breach notice; and, if cured within such time, the Breach specified in such notice shall cease to exist.

7.6.2 If a Breach is not cured as provided in this article, or if a Breach is not capable of being cured within the period provided for herein, a Default shall exist and the non-defaulting Parties acting together shall thereafter have the right to terminate this Agreement, in accordance with article 3.3 hereof, by written notice to the

defaulting Party at any time until cure occurs, and be relieved of any further obligation hereunder and, whether or not those Parties terminate this Agreement,

to recover from the defaulting Party all amounts due hereunder, plus all other damages and remedies to which they are entitled at law or in equity. The provisions of this article shall survive termination of this Agreement.

7.6.3 In cases where the Interconnection Customer has elected to proceed under Section 32.3.5.3 of the SGIP, if the Interconnection Request is withdrawn or deemed withdrawn pursuant to the SGIP during the term of this Agreement, this Agreement shall terminate.

SERVICE AGREEMENT NO. 2646

Article 8 Insurance

8.1 The Interconnection Customer shall, at its own expense, maintain in force general liability insurance without any exclusion for liabilities related to the interconnection undertaken pursuant to this Agreement. The amount of such insurance shall be sufficient to insure against all reasonably foreseeable direct liabilities given the size and nature of the generating equipment being interconnected, the interconnection itself, and the characteristics of the system to which the interconnection is made. Such insurance coverage is specified in Attachment **7** to this Agreement. The Interconnection Customer shall obtain additional insurance only if necessary as a function of owning and operating a generating facility. Such insurance shall be obtained from an insurance provider authorized to do business in New York State where the interconnection is located. Certification that such insurance is in effect shall be provided upon request of the Connecting Transmission Owner, except that the Interconnection Customer shall show proof of insurance to the Connecting Transmission Owner no later than ten Business Days prior to the anticipated commercial operation date. An Interconnection Customer of sufficient creditworthiness may propose to self-insure for such liabilities, and such a proposal shall not be unreasonably rejected.

8.2 The NYISO and Connecting Transmission Owner agree to maintain general liability insurance or self-insurance consistent with the existing commercial practice. Such insurance or self-insurance shall not exclude the liabilities undertaken pursuant to this Agreement.

8.3 The Parties further agree to notify one another whenever an accident or incident occurs resulting in any injuries or damages that are included within the scope of coverage of such insurance, whether or not such coverage is sought.

SERVICE AGREEMENT NO. 2646

Article 9 Confidentiality

9.1 Confidential Information shall mean any confidential and/or proprietary information provided by one Party to the other Party that is clearly marked or otherwise designated "Confidential." For purposes of this Agreement all design, operating specifications, and metering data provided by the Interconnection Customer shall be deemed Confidential Information regardless of whether it is clearly marked or otherwise designated as such. Confidential Information shall include, without limitation, information designated as such by the NYISO Code of Conduct contained in Attachment F to the ISO OATT.

9.2 Confidential Information does not include information previously in the public domain, required to be publicly submitted or divulged by Governmental Authorities (after notice to the other Party and after exhausting any opportunity to oppose such publication or release), or necessary to be divulged in an action to enforce this Agreement. Each Party receiving Confidential Information shall hold such information in confidence and shall not disclose it to any third party nor to the public without the prior written authorization from the Party providing that information, except to fulfill obligations under this Agreement, or to fulfill legal or regulatory requirements.

9.2.1 Each Party shall employ at least the same standard of care to protect Confidential Information obtained from the other Parties as it employs to protect its own Confidential Information.

9.2.2 Each Party is entitled to equitable relief, by injunction or otherwise, to enforce its rights under this provision to prevent the release of Confidential Information without bond or proof of damages, and may seek other remedies available at law or in equity for breach of this provision.

9.3 Notwithstanding anything in this article to the contrary, and pursuant to 18 CFR § lb.20, if FERC, during the course of an investigation or otherwise, requests information from one of the Parties that is otherwise required to be maintained in confidence pursuant to this Agreement, the Party shall provide the requested information to FERC, within the time provided for in the request for information. In providing the information to FERC, the Party may, consistent with 18 CFR § 388.112, request that the information be treated as confidential and non-public by FERC and that the information be withheld from public disclosure. Each Party is prohibited from notifying the other Parties to this Agreement prior to the release of the Confidential Information to FERC. The Party shall notify the other Parties to this Agreement when it is notified by FERC that a request to release Confidential Information has been received by FERC, at which time either of the Parties may respond before such information would be made public, pursuant to 18 CFR § 388.112. Requests from a state regulatory body conducting a confidential investigation shall be treated in a similar manner if consistent with the applicable state rules and regulations.

9.4 Consistent with the provisions of this article 9, the Parties to this Agreement will cooperate in good faith to provide each other, Affected Systems, Affected System

26

Operators, and state and federal regulators the information necessary to carry out the terms of the SGIP and this Agreement.

SERVICE AGREEMENT NO. 2646

Article 10 Disputes

10.1 The NYISO, Connecting Transmission Owner and Interconnection Customer agree to attempt to resolve all disputes arising out of the interconnection process according to the provisions of this article.

10.2 In the event of a dispute, the Parties will first attempt to promptly resolve it on an informal basis. The NYISO will be available to the Interconnection Customer and Connecting Transmission Owner to help resolve any dispute that arises with respect to performance under this Agreement. If the Parties cannot promptly resolve the dispute on an informal basis, then any Party shall provide the other Parties with a written Notice of Dispute. Such notice shall describe in detail the nature of the dispute.

10.3 If the dispute has not been resolved within two Business Days after receipt of the notice, any Party may contact FERC's Dispute Resolution Service ("DRS") for assistance in resolving the dispute.

10.4 The DRS will assist the Parties in either resolving their dispute or in selecting an appropriate dispute resolution venue (e.g., mediation, settlement judge, early neutral evaluation, or technical expert) to assist the Parties in resolving their dispute. The result of this dispute resolution process will be binding only if the Parties agree in advance. DRS can be reached at 1-877-337-2237 or via the internet at http://www.ferc.gov/legal/adr.asp.

10.5 Each Party agrees to conduct all negotiations in good faith and will be responsible for one-third of any costs paid to neutral third-parties.

10.6 If any Party elects to seek assistance from the DRS, or if the attempted dispute resolution fails, then any Party may exercise whatever rights and remedies it may have in equity or law consistent with the terms of this Agreement.

SERVICE AGREEMENT NO. 2646

Article 11 Taxes

11.1 The Parties agree to follow all applicable tax laws and regulations, consistent with FERC policy and Internal Revenue Service requirements.

11.2 Each Party shall cooperate with the other Parties to maintain the other Parties' tax status. Nothing in this Agreement is intended to adversely affect the tax status of any Party including the status of NYISO, or the status of any Connecting Transmission Owner with respect to the issuance of bonds including, but not limited to, Local Furnishing Bonds. Notwithstanding any other provisions of this Agreement, LIPA, NYPA and Consolidated Edison Company of New York, Inc. shall not be required to comply with any provisions of this Agreement that would result in the loss of tax-exempt status of any of their Tax-Exempt Bonds or impair their ability to issue future tax-exempt obligations. For purposes of this provision, Tax-Exempt Bonds shall include the obligations of the Long Island Power Authority, NYPA and Consolidated Edison Company of New York, Inc., the interest on which is not included in gross income under the Internal Revenue Code.

11.3 LIPA and NYPA do not waive their exemptions, pursuant to Section 201(f) of the FPA, from Commission jurisdiction with respect to the Commission's exercise of the FPA's general ratemaking authority.

11.4 Any payments due to the Connecting Transmission Owner under this Agreement shall be adjusted to include any tax liability incurred by the Connecting Transmission Owner with respect to the interconnection request which is the subject of this Agreement. Such adjustments shall be made in accordance with the provisions of Article 5.17 of the LGIA in Attachment X of the ISO OATT. Except where otherwise noted, all costs, deposits, financial obligations and the like specified in this Agreement shall be assumed not to reflect the impact of applicable taxes.

SERVICE AGREEMENT NO. 2646

Article 12 Miscellaneous

12.1 Governing Law, Regulatory Authority, and Rules

The validity, interpretation and enforcement of this Agreement and each of its provisions shall be governed by the laws of the state of New York, without regard to its conflicts of law principles. This Agreement is subject to all Applicable Laws and Regulations. Each Party expressly reserves the right to seek changes in, appeal, or otherwise contest any laws, orders, or regulations of a Governmental Authority.

12.2 Amendment

The Parties may amend this Agreement by a written instrument duly executed by the Parties, or under article 12.12 of this Agreement.

12.3 No Third-Party Beneficiaries

This Agreement is not intended to and does not create rights, remedies, or benefits of any character whatsoever in favor of any persons, corporations, associations, or entities other than the Parties, and the obligations herein assumed are solely for the use and benefit of the Parties, their successors in interest and where permitted, their assigns. Notwithstanding the foregoing, any subcontractor of the Connecting Transmission Owner or NYISO assisting either of those Parties with the Interconnection Request covered by this Agreement shall be entitled to the benefits of indemnification provided for under Article 7.3 of this Agreement and the limitation of liability provided for in Article 7.2 of this Agreement.

12.4 Waiver

12.4.1 The failure of a Party to this Agreement to insist, on any occasion, upon strict performance of any provision of this Agreement will not be considered a waiver of any obligation, right, or duty of, or imposed upon, such Party.

12.4.2 Any waiver at any time by a Party of its rights with respect to this Agreement shall not be deemed a continuing waiver or a waiver with respect to any other failure to comply with any other obligation, right, duty of this Agreement. Termination or default of this Agreement for any reason by Interconnection Customer shall not constitute a waiver of the Interconnection Customer's legal rights to obtain an interconnection from the NYISO. Any waiver of this Agreement shall, if requested, be provided in writing.

12.5 Entire Agreement

This Agreement, including all Attachments, constitutes the entire agreement between the Parties with reference to the subject matter hereof, and supersedes all prior and contemporaneous understandings or agreements, oral or written, between the Parties with respect to the subject matter of this Agreement. There are no other agreements, representations, warranties, or

covenants which constitute any part of the consideration for, or any condition to, any Party's compliance with its obligations under this Agreement.

SERVICE AGREEMENT NO. 2646

12.6 Multiple Counterparts

This Agreement may be executed in two or more counterparts, each of which is deemed an original but all constitute one and the same instrument.

12.7 No Partnership

This Agreement shall not be interpreted or construed to create an association, joint venture, agency relationship, or partnership between the Parties or to impose any partnership obligation or partnership liability upon any Party. No Party shall have any right, power or authority to enter into any agreement or undertaking for, or act on behalf of, or to act as or be an agent or representative of, or to otherwise bind, another Party.

12.8 Severability

If any provision or portion of this Agreement shall for any reason be held or adjudged to be invalid or illegal or unenforceable by any court of competent jurisdiction or other Governmental Authority, (1) such portion or provision shall be deemed separate and independent, (2) the Parties shall negotiate in good faith to restore insofar as practicable the benefits to each Party that were affected by such ruling, and (3) the remainder of this Agreement shall remain in full force and effect.

12.9 Security Arrangements

Infrastructure security of electric system equipment and operations and control hardware and software is essential to ensure day-to-day reliability and operational security. FERC expects the NYISO, the Connecting Transmission Owner, Market Participants, and Interconnection Customers interconnected to electric systems to comply with the recommendations offered by the President's Critical Infrastructure Protection Board and, eventually, best practice recommendations from the electric reliability authority. All public utilities are expected to meet basic standards for system infrastructure and operational security, including physical, operational, and cyber-security practices.

12.10 Environmental Releases

Each Party shall notify the other Parties, first orally and then in writing, of the release of any hazardous substances, any asbestos or lead abatement activities, or any type of remediation activities related to the Small Generating Facility or the Interconnection Facilities, each of which may reasonably be expected to affect the other Parties. The notifying Party shall: (1) provide the notice as soon as practicable, provided such Party makes a good faith effort to provide the notice no later than 24 hours after such Party becomes aware of the occurrence, and (2) promptly furnish to the other Parties copies of any publicly available reports filed with any governmental authorities addressing such events.

12.11 Subcontractors

Nothing in this Agreement shall prevent a Party from utilizing the services of any

subcontractor as it deems appropriate to perform its obligations under this Agreement; provided,

however, that each Party shall require its subcontractors to comply with all applicable terms and conditions of this Agreement in providing such services and each Party shall remain primarily liable to the other Parties for the performance of such subcontractor.

12.11.1 The creation of any subcontract relationship shall not relieve the hiring Party of any of its obligations under this Agreement. The hiring Party shall be fully responsible to the other Parties to the extent provided for in Articles 7.2 and 7.3 above for the acts or omissions of any subcontractor the hiring Party hires as if no subcontract had been made; provided, however, that in no event shall the NYISO or Connecting Transmission Owner be liable for the actions or inactions of the Interconnection Customer or its subcontractors with respect to obligations of the Interconnection Customer under this Agreement. Any applicable obligation imposed by this Agreement upon the hiring Party shall be equally binding upon, and shall be construed as having application to, any subcontractor of such Party.

12.11.2 The obligations under this article will not be limited in any way by any limitation of subcontractor's insurance.

12.12 Reservation of Rights

Nothing in this Agreement shall alter the right of the NYISO or Connecting Transmission Owner to make unilateral filings with FERC to modify this Agreement with respect to any rates, terms and conditions, charges, classifications of service, rule or regulation under Section 205 or any other applicable provision of the Federal Power Act and FERC's rules and regulations thereunder which rights are expressly reserved herein, and the existing rights of the Interconnection Customer to make a unilateral filing with FERC to modify this Agreement under any applicable provision of the Federal Power Act and FERC's rules and regulations are also expressly reserved herein; provided that each Party shall have the right to protest any such filing by another Party and to participate fully in any proceeding before FERC in which such modifications may be considered. Nothing in this Agreement shall limit the rights of the Parties or of FERC under Sections 205 or 206 of the Federal Power Act and FERC's rules and regulations, except to the extent that the Parties otherwise agree as provided herein.

SERVICE AGREEMENT NO. 2646

Article 13 Notices

13.1 General

Unless otherwise provided in this Agreement, any written notice, demand, or request required or authorized in connection with this Agreement shall be deemed properly given if delivered in person, delivered by recognized national courier service, or sent by first class mail, postage prepaid, to the person specified below:

If to the Interconnection Customer:

SunEast Hills Solar LLC
Attention: Richard J. Squadron
Address: 110 Phoenixville Pike, Suite 100
City: Malvern State: PA Zip: 19355-1018
Phone: (484) 983-3130

If to the Connecting Transmission Owner:

Niagara Mohawk Power Corporation d/b/a National Grid
Attention: Director, Transmission Commercial Services
Address: 40 Sylvan Road
City: Waltham State: MA Zip: 02541-1120
Phone: (781) 907-2411
Fax: (315) 428-5114

If to the NYISO:

Before Commercial Operation of the Small Generating Facility

New York Independent System Operator, Inc.
Attention: Vice President, System and Resource Planning
Address: 10 Krey Boulevard
City: Rensselaer State: NY Zip: 12144
Phone: (518) 356-6000

After Commercial Operation:

New York Independent System Operator, Inc.
Attention: Vice President, Operations
Address: 10 Krey Boulevard
City: Rensselaer State: NY Zip: 12144
Phone: (518) 356-6000

13.2 Billing and Payment

Billings and payments shall be sent to the addresses set out below:

SERVICE AGREEMENT NO. 2646

Interconnection Customer:

SunEast Hills Solar LLC
Attention: Suriyun Sukduang
Address: 5-2 Davis Road East
City: Old Lyme State: CT Zip: 06371

Connecting Transmission Owner:

Niagara Mohawk Power Corporation d/b/a National Grid
Attention: Director, Transmission Commercial Services
Address: 40 Sylvan Road
City: Waltham State: MA Zip: 02541-1120

13.3 Alternative Forms of Notice

Any notice or request required or permitted to be given by either Party to the other and not required by this Agreement to be given in writing may be so given by telephone or e-mail to the telephone numbers and e-mail addresses set out below:

If to the Interconnection Customer:

SunEast Hills Solar LLC
Attention: Suriyun Sukduang
Address: 5-2 Davis Road East
City: Old Lyme State: CT Zip: 06371
Phone: (713) 705-6810
E-mail: suri.sukduang@suneastpower.com

If to the Connecting Transmission Owner:

Niagara Mohawk Power Corporation d/b/a National Grid
Attention: Director, Transmission Commercial Services
Address: 40 Sylvan Road
City: Waltham State: MA Zip: 02541-1120
Phone: (781) 907-2411
Fax: (315) 428-5114
E-mail: kevin.reardon@nationalgrid.com

If to the NYISO:

New York Independent System Operator, Inc.
Attention: Vice President, Operations
Address: 10 Krey Boulevard
City: Rensselaer State: NY Zip: 12144

Phone: (518) 356-6000
E-mail: interconnectionsupport@nyiso.com

SERVICE AGREEMENT NO. 2646

13.4 Designated Operating Representative

The Parties may also designate operating representatives to conduct the communications which may be necessary or convenient for the administration of this Agreement. This person will also serve as the point of contact with respect to operations and maintenance of the Party's facilities.

Interconnection Customer's Operating Representative:

SunEast Hills Solar LLC
Attention: Suriyun Sukduang
Address: 5-2 Davis Road East
City: Old Lyme State: CT Zip: 06371
Phone: (713) 705-6810
E-mail: suri.sukduang@suneastpower.com

Connecting Transmission Owner's Operating Representative:

Niagara Mohawk Power Corporation d/b/a National Grid
Attention: Director, Transmission Commercial Services
Address: 40 Sylvan Road
City: Waltham State: MA Zip: 02541-1120
Phone: (781) 907-2411
Fax: (315) 428-5114

NYISO's Operating Representative:

New York Independent System Operator, Inc.
Attention: Vice President, Operations
Address: 10 Krey Boulevard
City: Rensselaer State: NY Zip: 12144
Phone: (518) 356-6000
E-mail: interconnectionsupport@nyiso.com

13.5 Changes to the Notice Information

Either Party may change this information by giving five Business Days written notice prior to the effective date of the change.

35

SERVICE AGREEMENT NO. 2646

Article 14 Signatures

IN WITNESS WHEREOF, the Parties have caused this Agreement to be executed by their respective duly authorized representatives.

For the New York Independent System Operator, Inc.

By:

Name: _____

Title: _____

Date: _____

For Niagara Mohawk Power Corporation d/b/a National Grid

By:

Name: _____

Title: _____

Date: _____

For SunEast Hills Solar LLC

By:

Name: _____

Title: _____

Date: _____

SERVICE AGREEMENT NO. 2646

Attachment 1

Glossary of Terms

Affected System - An electric system other than the transmission system owned, controlled or operated by the Connecting Transmission Owner that may be affected by the proposed interconnection.

Affected System Operator - Affected System Operator shall mean the operator of any Affected System.

Affected Transmission Owner -The New York public utility or authority (or its designated agent) other than the Connecting Transmission Owner that: (i) owns facilities used for the transmission of Energy in interstate commerce and provides Transmission Service under the Tariff, and (ii) owns, leases or otherwise possesses an interest in a portion of the New York State Transmission System where System Deliverability Upgrades or System Upgrade Facilities are installed pursuant to Attachment Z and Attachment S to the ISO OATT.

Applicable Laws and Regulations - All duly promulgated applicable federal, state and local laws, regulations, rules, ordinances, codes, decrees, judgments, directives, or judicial or administrative orders, permits and other duly authorized actions of any Governmental Authority, including but not limited to Environmental Law.

Applicable Reliability Standards - The criteria, requirements and guidelines of the North American Electric Reliability Council, the Northeast Power Coordinating Council, the New York State Reliability Council and related and successor organizations, or the Transmission District to which the Interconnection Customer's Small Generating Facility is directly interconnected, as those criteria, requirements and guidelines are amended and modified and in effect from time to time; provided that no Party shall waive its right to challenge the applicability of or validity of any criterion, requirement or guideline as applied to it in the context of Attachment Z to the ISO OATT and this Agreement. For the purposes of this Agreement, this definition of Applicable Reliability Standards shall supersede the definition of Applicable Reliability Standards set out in Attachment X to the ISO OATT.

Base Case - The base case power flow, short circuit, and stability data bases used for the Interconnection Studies by NYISO, Connecting Transmission Owner or Interconnection Customer; described in Section 32.2.3 of the Large Facility Interconnection Procedures.

Breach - The failure of a Party to perform or observe any material term or condition of this Agreement.

Business Day - Monday through Friday, excluding federal holidays.

Capacity Resource Interconnection Service -The service provided by NYISO to

Interconnection Customers that satisfy the NYISO Deliverability Interconnection Standard or that are otherwise eligible to receive CRIS in accordance with Attachment S to the ISO OATT;

1-1

such service being one of the eligibility requirements for participation as a NYISO Installed Capacity Supplier.

Commercial Operation shall mean the status of the Small Generating Facility that has commenced generating electricity for sale, excluding electricity generated during Trial Operation, notice of which must be provided to the NYISO in the form of Attachment 9 to this Agreement.

Commercial Operation Date of a unit shall mean the date on which the Large Generating Facility commences Commercial Operation as agreed to by the Parties, notice of which must be provided to the NYISO in the form of Attachment 9 to this Agreement.

Connecting Transmission Owner - The New York public utility or authority (or its designated agent) that: (i) owns facilities used for the transmission of Energy in interstate commerce and provides Transmission Service under the Tariff, (ii) owns, leases or otherwise possesses an interest in the portion of the New York State Transmission System or Distribution System at the Point of Interconnection, and (iii) is a Party to the Standard Small Generator Interconnection Agreement.

Default - The failure of a Party in Breach of this Agreement to cure such Breach under the Small Generator Interconnection Agreement.

Distribution System - The Transmission Owner's facilities and equipment used to distribute electricity that are subject to FERC jurisdiction, and are subject to the NYISO's Large Facility Interconnection Procedures in Attachment X to the ISO OATT or Small Generator Interconnection Procedures in Attachment Z to the ISO OATT under FERC Order Nos. 2003 and/or 2006. For the purpose of this Agreement, the term Distribution System shall not include LIPA's distribution facilities.

Distribution Upgrades - The additions, modifications, and upgrades to the Connecting Transmission Owner's Distribution System at or beyond the Point of Interconnection to facilitate interconnection of the Small Generating Facility and render the transmission service necessary to effect the Interconnection Customer's wholesale sale of electricity in interstate commerce. Distribution Upgrades do not include Interconnection Facilities or System Upgrade Facilities or System Deliverability Upgrades.

Energy Resource Interconnection Service - The service provided by NYISO to interconnect the Interconnection Customer's Small Generating Facility to the New York State Transmission System or Distribution System in accordance with the NYISO Minimum Interconnection Standard, to enable the New York State Transmission System to receive Energy and Ancillary Services from the Small Generating Facility, pursuant to the terms of the ISO OATT.

Force Majeure - Any act of God, labor disturbance, act of the public enemy, war, insurrection, riot, fire, storm or flood, explosion, breakage or accident to machinery or equipment, any order, regulation or restriction imposed by governmental, military or lawfully established civilian

authorities, or any other cause beyond a Party's control. A Force Majeure event does not include an act of negligence or intentional wrongdoing. For the purposes of this Agreement, this

definition of Force Majeure shall supersede the definitions of Force Majeure set out in Section 32.2.11 of the NYISO Open Access Transmission Tariff.

Good Utility Practice - Any of the practices, methods and acts engaged in or approved by a significant portion of the electric industry during the relevant time period, or any of the practices, methods and acts which, in the exercise of reasonable judgment in light of the facts known at the time the decision was made, could have been expected to accomplish the desired result at a reasonable cost consistent with good business practices, reliability, safety and expedition. Good Utility Practice is not intended to be limited to the optimum practice, method, or act to the exclusion of all others, but rather to be acceptable practices, methods, or acts generally accepted in the region.

Governmental Authority - Any federal, state, local or other governmental regulatory or administrative agency, court, commission, department, board, or other governmental subdivision, legislature, rulemaking board, tribunal, or other governmental authority having jurisdiction over the Parties, their respective facilities, or the respective services they provide, and exercising or entitled to exercise any administrative, executive, police, or taxing authority or power; provided, however, that such term does not include the Interconnection Customer, NYISO, Affected Transmission Owner, Connecting Transmission Owner or any Affiliate thereof.

Initial Synchronization Date shall mean the date upon which the Small Generating Facility is initially synchronized and upon which Trial Operation begins, notice of which must be provided to the NYISO in the form of Attachment 9.

In-Service Date shall mean the date upon which the Developer reasonably expects it will be ready to begin use of the Connecting Transmission Owner's Interconnection Facilities to obtain back feed power.

Interconnection Customer - Any entity, including the Transmission Owner or any of the affiliates or subsidiaries, that proposes to interconnect its Small Generating Facility with the New York State Transmission System or the Distribution System.

Interconnection Facilities - The Connecting Transmission Owner's Interconnection Facilities and the Interconnection Customer's Interconnection Facilities. Collectively, Interconnection Facilities include all facilities and equipment between the Small Generating Facility and the Point of Interconnection, including any modification, additions or upgrades that are necessary to physically and electrically interconnect the Small Generating Facility to the New York State Transmission System or the Distribution System. Interconnection Facilities are sole use facilities and shall not include Distribution Upgrades or System Upgrade Facilities.

Interconnection Request - The Interconnection Customer's request, in accordance with the Tariff, to interconnect a new Small Generating Facility, or to materially increase the capacity of, or make a material modification to the operating characteristics of, an existing Small Generating Facility that is interconnected with the New York State Transmission System or the Distribution System. For the purposes of this Agreement, this definition of Interconnection Request shall supersede the definition of Interconnection Request set out in Attachment X to the ISO OATT.

1-3

SERVICE AGREEMENT NO. 2646

Interconnection Study - Any study required to be performed under Sections 32.2 or 32.3 of the SGIP.

Material Modification - A modification that has a material impact on the cost or timing of any Interconnection Request with a later queue priority date.

New York State Transmission System - The entire New York State electric transmission system, which includes: (i) the Transmission Facilities under ISO Operational Control; (ii) the Transmission Facilities Requiring ISO Notification; and (iii) all remaining transmission facilities within the New York Control Area.

NYISO Deliverability Interconnection Standard - The standard that must be met, unless otherwise provided for by Attachment S to the ISO OATT, by (i) any generation facility larger than 2MW in order for that facility to obtain CRIS; (ii) any Class Year Transmission Project proposing to interconnect to the New York State Transmission System and receive Unforced Capacity Delivery Rights; (iii) any entity requesting External CRIS Rights, and (iv) any entity requesting a CRIS transfer pursuant to Section 25.9.5 of Attachment S to the ISO OATT. To meet the NYISO Deliverability Interconnection Standard, the Interconnection Customer must, in accordance with the rules in Attachment S to the ISO OATT, fund or commit to fund any System Deliverability Upgrades identified for its project in the Class Year Deliverability Study.

NYISO Minimum Interconnection Standard - The reliability standard that must be met by any generation facility or Class Year Transmission Project that is subject to NYISO's Large Facility Interconnection Procedures in Attachment X to the ISO OATT or the NYISO's Small Generator Interconnection Procedures in this Attachment Z, that is proposing to connect to the New York State Transmission System or Distribution System, to obtain ERIS. The Minimum Interconnection Standard is designed to ensure reliable access by the proposed project to the New York State Transmission System or to the Distribution System. The Minimum Interconnection Standard does not impose any deliverability test or deliverability requirement on the proposed interconnection.

Operating Requirements - Any operating and technical requirements that may be applicable due to Regional Transmission Organization, Independent System Operator, control area, or the Connecting Transmission Owner's requirements, including those set forth in the Small Generator Interconnection Agreement. Operating Requirements shall include Applicable Reliability Standards.

Party or Parties - The NYISO, Connecting Transmission Owner, Interconnection Customer or any combination of the above.

Point of Interconnection - The point where the Interconnection Facilities connect with the New York State Transmission System or the Distribution System.

Reasonable Efforts - With respect to an action required to be attempted or taken by a Party under this Agreement, efforts that are timely and consistent with Good Utility Practice and are otherwise substantially equivalent to those a Party would use to protect its own interests.

1-4

SERVICE AGREEMENT NO. 2646

Small Generating Facility - The Interconnection Customer's facility, no larger than 20 MW for the production and/or storage for later injection of electricity identified in the Interconnection Request if proposing to interconnect to the New York State Transmission System or Distribution System, but shall not include (i) facilities proposing to simply receive power from the New York State Transmission System or the Distribution System; (ii) facilities proposing to interconnect to the New York State Transmission System or the Distribution System made solely for the purpose of generation with no wholesale sale for resale nor to net metering; (iii) facilities proposing to the New York State Transmission System or the Distribution System made solely for the purpose of net metering; (iv) facilities proposing to interconnect to LIPA's distribution facilities; and (v) the Interconnection Customer's Interconnection Facilities. A facility will be treated as a single Small Generating Facility if all units within the facility are behind a single facility meter, even if such units are different technology types.

System Deliverability Upgrades - The least costly configuration of commercially available components of electrical equipment that can be used, consistent with Good Utility Practice and Applicable Reliability Requirements, to make the modifications or additions to the existing New York State Transmission System that are required for the proposed project to connect reliably to the system in a manner that meets the NYISO Deliverability Interconnection Standard for Capacity Resource Interconnection Service.

System Upgrade Facilities - The least costly configuration of commercially available components of electrical equipment that can be used, consistent with Good Utility Practice and Applicable Reliability Requirements to make the modifications to the existing transmission system that are required to maintain system reliability due to: (i) changes in the system, including such changes as load growth and changes in load pattern, to be addressed in the form of generic generation or transmission projects; and (ii) proposed interconnections. In the case of proposed interconnection projects, System Upgrade Facilities are the modification or additions to the existing New York State Transmission System that are required for the proposed project to connect reliably to the system in a manner that meets the NYISO Minimum Interconnection Standard.

Tariff - The NYISO's Open Access Transmission Tariff, as filed with the FERC, and as amended or supplemented from time to time, or any successor tariff.

Trial Operation shall mean the period during which Interconnection Customer is engaged in on-site test operations and commissioning of the Small Generating Facility prior to Commercial Operation.

Upgrades - The required additions and modifications to the Connecting Transmission Owner's portion of the New York State Transmission System or the Distribution System at or beyond the Point of Interconnection. Upgrades may be System Upgrade Facilities or System Deliverability Upgrades Distribution Upgrades. Upgrades do not include Interconnection Facilities.

1-5

SERVICE AGREEMENT NO. 2646

Attachment 2

Detailed Scope of Work, Including Description and Costs of the Small Generating Facility, Interconnection Facilities, and Metering Equipment

Equipment, including the Small Generating Facility, Interconnection Facilities, and metering equipment shall be itemized and identified as being owned by the Interconnection Customer, or the Connecting Transmission Owner. The NYISO, in consultation with the Connecting Transmission Owner, will provide a best estimate itemized cost, including overheads, of its Interconnection Facilities and metering equipment, and a best estimate itemized cost of the annual operation and maintenance expenses associated with its Interconnection Facilities and metering equipment.

A. PROJECT DESCRIPTION

The Interconnection Customer is constructing a 20 MW solar generation farm to be located in Little Falls, New York ("Small Generating Facility"). The Small Generating Facility will consist of a collector system comprised of:

- five (5) TMEIC 4200kVA solar inverters;
- one (1) TMEIC 3360kVA solar inverter;
- five (5) 4200kVA 34.5kV/630V pad mount transformers with integral disconnect and fuses; and
- one (1) 3360kVA 34.5kV/630V pad mount transformers with integral disconnect and fuses.

The output of each of the transformers is aggregated on a 34.5kV collection circuit and stepped up to 115kV via a 25MVA 34.5/115kV step-up transformer in a collector substation ("Hills Solar Collector Substation").

The Point of Interconnection ("POI") for the Small Generating Facility is Connecting Transmission Owner's 115kV Fairfield-Inghams Line 3 between structures 40½ and tower 41. The POI will be approximately 3 miles from Connecting Transmission Owner's Fairfield Substation, 4.15 miles from Connecting Transmission Owner's Inghams Substation and .04 miles from Connecting Transmission Owner's Salisbury Substation.

The Point of Change of Ownership ("PCO") will be at the line side connection of the Interconnection Customer's disconnect switch located on the Interconnection Customer's termination structure inside the Interconnection Customer's Hills Solar Collector Substation. Connecting Transmission Owner will own the insulators, whips, and hardware connections to the Interconnection Customer's disconnect switch.

B. INTERCONNECTION CUSTOMER'S INTERCONNECTION FACILITIES

2-1

SERVICE AGREEMENT NO. 2646

The Interconnection Customer's Interconnection Facilities ("ICIF") include all of the facilities between the Interconnection Customer's side of the PCO and the Small Generating Facility, except the Connecting Transmission Owner-owned revenue metering and telecommunications described in Section C below. The ICIF will be located on property owned or leased by the Interconnection Customer. As depicted on the one-line diagram in Attachment 3, the ICIF consist of the following:

1. Hills Solar Collector Substation

- one (1) three phase, three winding, 115-34.5/13.8kV wye-grounded/wye-grounded/delta tertiary, step-up transformer rated 15/20/25MVA (ONAN/ONAF/ONAF), with impedance of 9.0%;
- six (6) 96kV, 76kV maximum continuous operating voltage ("MCOV") station class surge arresters;
- one (1) 115kV, 1200A, 550kV basic insulation level ("BIL") group operated air break switch;
- one (1) 115kV, 1200A, 550kV BIL, 40 kAIC SF-6 circuit breaker;
- three (3) 115kV, potential transformers 600/1000:1:1;
- six (6) 24.4kV MCOV station class surge arresters;
- one (1) 38kV, 1200A, group operated air break switch;
- one (1) 38kV, 1200A, 25kAIC vacuum circuit breaker;
- three (3) 38kV, 1200A, hookstick operated disconnect switches;
- three (3) 38kV, potential transformers ("PTs") 300:1; and
- one (1) 50kVA 19.9kV - 120/240v station service transformer.

2. System Protection Requirements

a) Line 3

Connecting Transmission Owner's Fairfield-Inghams Line 3 shall be protected using a permissive overreaching transfer trip ("POTT") for the A package and step distance as the B package. Direct transfer trip ("DTT") will be used between the Hills Solar Collector Substation and the line terminals at Inghams and Fairfield Substations to ensure removal of generation. This will require the installation of two (2) RFL GARD8000 tele-protection sets at the Hills Solar Collector Substation. The Interconnection Customer will provide redundant 115kV line

protection to remove the generation for line faults. Two sets of 2000:5, C800 multi-ratio current transformers ("CTs") shall be provided for these schemes.

2-2

b) Transformer

The 115-34.5kV transformer is protected by two independent protection systems; one must be a transformer differential. If overcurrent protection is used for the other system, then both phase and ground time and instantaneous protection shall be provided. Each of the two schemes will operate separate lockout relays to trip and block the necessary breakers.

c) Breaker

Breaker failure protection for the 115kV breaker will trip the appropriate adjacent breakers and send direct transfer trip to Inghams and Fairfield Substations. DTT receive from Inghams and Fairfield Substations will be required to trip the Interconnection Customer's 115kV breaker for a line relay operation, or breaker failure at Inghams and Fairfield Substations.

d) Telecommunications Circuit

A fiber facility at the Hills Solar Collector Substation for protection systems and data transmittal will include:

- one (1) DS1 circuit from the Hills Solar Collector Substation to Inghams Substation;
- one (1) DS1 circuit from the Hills Solar Collector Substation to Fairfield Substation; and
- one (1) DS1 multiprotocol label switching ("MPLS") virtual private network ("VPN") circuit for the energy management system and report transmitting unit ("EMS-RTU").

(*Note: Third party telecommunications are potentially long lead time items*.)

C. CONNECTING TRANSMISSION OWENER'S INTERCONNECTION FACILITIES

As depicted on the one-line diagram in Attachment 3, the Connecting Transmission Owner's Interconnection Facilities ("CTOIF") consist of the following constructed or installed between the POI and PCO, as well as metering and telecommunications located at the Hills Solar Collector Substation.

1. Revenue Metering

The Connecting Transmission Owner owned revenue metering shall be located at the Hills Solar Collector Substation on the generator side of the 115kV breaker in accordance with the requirements identified in the Project Specific Specifications (as defined below), and shall consist of:

2-3

- three (3) combination current/voltage transformer ("CT/VT") units (manufacturer and model shall be ABB/Kuhlman KXM-550, GE Grid Solutions KOTEF 123.ER, or other Connecting Transmission Owner specified equivalent); and

- one (1) revenue meter.

(*Note: The Connecting Transmission Owner's revenue metering CTs and VTs cannot be used to feed the Interconnection Customer's check meter*.)

2. EMS-RTU

The RTU will be located at the Hills Solar Collector Substation in an RTU cabinet that is typically 42"H x 30"W x 12"D, wall-mounted with the bottom edge 36" above the floor with a 5-foot clear working space in front of the mounting panel.

(*Note: If no indoor facility is available, then installation of the RTU and revenue metering equipment in a dedicated, weatherproof, heated cubicle (accessible only to Connecting Transmission Owner) is acceptable*.)

3. Line 3 Tap

Line 3 is approximately 7.15 miles long and runs from Fairfield Substation in Little Falls, NY to Inghams Substation in Manheim, NY. The Hills Solar Collector Substation will interconnect to Line 3 between Structure 40½ and tower 41 via a radial tap ("Line 3 Tap"), consisting of:

- one (1) vertical tangent light duty steel pole;

- one (1) vertical steel deadend on caisson foundation;

- one (1) vertical steel single pole dead-end structure on caisson foundation;

- two (2) steel pole switch structures (one near tower 41 and the other approximately 25 feet away from structure 40½);

- floating dead-ends on tower 41;

- approximately 400 circuit feet of 336.4 kcmil 18/1 'MERLIN' ACSR; and

- two (2) group operated load break switches.

Approximately 200 circuit feet of the existing conductor will be maintained.

D. SCOPE OF WORK AND RESPONSIBILITIES

1. Interconnection Customer's Scope of Work and Responsibilities

2-4

SERVICE AGREEMENT NO. 2646

The Interconnection Customer will design, construct, own, operate and maintain the Interconnection Customer's Interconnection Facilities in accordance with the following requirements, to the extent not inconsistent with the terms of this Agreement, the ISO OATT or applicable NYISO Procedures: NYISO requirements, industry standards and specifications regulatory requirements, the Connecting Transmission Owner's applicable Connecting Transmission Owner's Electric System Bulletins ("ESBs"), provided at the following website: https://www.nationalgridus.com/ProNet/Technical-Resources/Electric-Specifications, the System Protection and Interconnection Customer Attachment Facilities Electric Installation Specification for Hills Solar Project provided as Appendix C to the Facilities Study for the Small Generating Facility ("Project Specific Specifications"), and Good Utility Practice.

All protection scheme design drawings and relay settings shall be prepared by the Interconnection Customer's NYS licensed professional engineer, and the design and equipment specifications shall be provided to the Connecting Transmission Owner for review, comment and acceptance, prior to application and testing in accordance with the ESBs.

The Interconnection Customer shall install a meter panel in accordance with the Project Specific Specifications and the Connecting Transmission Owner's ESB 756A.

As per ESB 752, the Interconnection Customer shall install the RTU indoors and within 15 feet of the meter(s), and remote from:

- heavy traffic areas, work areas, and loading areas;
- heat producing or high electrostatic or electromagnetic field producing equipment; and
- station batteries.

The Interconnection Customer shall mount the CT/PT units, make grounding connections, and complete all primary wiring. The Interconnection Customer shall install the meter socket enclosure near the Connecting Transmission Owner's RTU in accordance with the Project Specific Specifications.

The Interconnection Customer shall install conduit for the wiring from the instrument transformers to the meter equipment panel and meter socket in accordance with the ESBs and the Project Specific Specifications.

The Interconnection Customer is responsible for ordering the fiber facility required at the Hills Solar Collector Substation. Upon termination of this Agreement, Interconnection Customer shall be responsible for all costs associated with the decommissioning and removal of Interconnection Facilities.

New right-of-way ("ROW") will be required for the construction, operation, and maintenance of the Line 3 Tap and must accommodate the 125' x 125' work pads required for the installation of the new structures. The Interconnection Customer is responsible for obtaining the property/easements needed for the tap line, access roads to/from the tap, and work pads, in

accordance with the standards set forth in the Connecting Transmission Owner's Standards And Requirements Relating to Third Party Acquisition and Transfer of Real Property Interests to

Niagara Mohawk Power Corporation for Electric Facilities and Survey Specifications (January 2019). The Interconnection Customer is also responsible for all permitting.

The Interconnection Customer's takeoff structure shall be designed in accordance with the requirements set forth in the Project Specific Specifications.

2. Connecting Transmission Owner's Scope of Work and Responsibilities

The Connecting Transmission Owner will construct all Connecting Transmission Owner Interconnection Facilities, except as otherwise stated above and in the Project Specific Specifications. The Connecting Transmission Owner will complete all engineering reviews, field verifications and witness testings, etc. in accordance with the ESBs and the Project Specific Specifications.

The Connecting Transmission Owner will provide the CTs and VTs, and the Interconnection Customer shall mount them, make grounding connections, and complete all primary wiring. In addition, the Connecting Transmission Owner shall provide the meter socket enclosure for the Interconnection Customer to install near the Connecting Transmission Owner's RTU.

For revenue metering, the Connecting Transmission Owner shall:

- provide, run, and wire both ends of the color-coded cable for the revenue metering instrument transformer secondary wiring;
- perform all terminations; and
- supply and install the meter.

The Connecting Transmission Owner shall complete all wiring, testing and commissioning.

E. ESTIMATED COSTS OF INTERCONNECTION FACILITIES

The total estimated costs (+30%/-15%) of the work associated with the Interconnection Facilities required for the interconnection of the Small Generating Facility are presented in the table below.

2-6

SERVICE AGREEMENT NO. 2646

Interconnection Customer Interconnection Facilities

Engineering review and compliance verification of the ICIF, including all required drawings and equipment specifications reviews, relay settings, construction and testing assistance by engineering, field verification, and witness testing	**$111,800**

Connecting Transmission Owner Interconnection Facilities (CTO IF)

Engineering, design, construction, testing and commissioning for revenue metering and EMS-RTU.

EMS-RTU & Rev. Metering	**$298,100**
Line 3 Tap	**$1,194,000**
CTO IF Subtotal	***$1,492,100***
Subtotal	**$1,603,900**
Contingency	$407,000
TOTAL	**$2,010,900**

As described in the Facilities Study for the Small Generating Facility, the estimates provided herein:

Assume:

- 5X10 construction work week;
- outages are available;
- permitting is not required; and
- existing equipment to remain is functional.

Exclude (as applicable):

- discussions and negotiations of issued interconnection study;
- application fees;
- applicable surcharges;
- overall project sales tax;
- property taxes;

2-7	

- line switching;
- property/easement acquisitions;
- future operation and maintenance costs;
- recurring monthly communications circuits' charges, if any, responsible by the Interconnection Customer to the communications utility;
- soil testing;
- adverse field conditions such as rock, water, weather, and Interconnection Customer electrical equipment obstructions;
- environmental mitigation;
- extended engineering to minimize outage time or Connecting Transmission Owner's public duty to serve;
- extended craft labor hours, to minimize outage and/or construction time; or
- any required permits.

Cost adders estimated for overtime will be based on 1.5 and 2 times labor rates if required for work beyond normal business hours. Meals and equipment are also extra costs incurred for overtime labor.

F. O&M EXPENSES FOR INTERCONNECTION FACILITIES

In accordance with Article 4 of this Agreement, the Interconnection Customer shall be responsible for all reasonable expenses associated with the operation, maintenance, repair and replacement of the Connecting Transmission Owner's Interconnection Facilities, as such facilities are detailed in this Attachment 2 ("O&M Expenses").

The Interconnection Customer shall have the option to pay such O&M Expenses either under the procedure described in Option 1 or in Option 2 below.

Option 1: Fixed On-Going Charge Payment:

The Connecting Transmission Owner will invoice and Interconnection Customer shall pay an annual payment to the Connecting Transmission Owner equal to the product of the Gross Plant Investment associated with the Connecting Transmission Owner's Interconnection Facilities and the Annual Transmission Ongoing Charge Factor, for the term of this Interconnection Agreement.

2-8

SERVICE AGREEMENT NO. 2646

All payments due to be made by the Interconnection Customer shall be made within thirty (30) days after receiving an invoice from the Connecting Transmission Owner.

The Project's Gross Connecting Transmission Owner's Interconnection Facilities Plant Investment cost shall be established in writing by the Connecting Transmission Owner no later than 90 days following commercial operation.

The Annual Transmission On-Going Charge Factor shall be calculated annually each July based on the Connecting Transmission Owner's most recent FERC Form 1 data and will equal the sum of the Revenue Requirement Components as identified in O&M Attachment 1 divided by the Total Gross Plant of the Connecting Transmission Owner. Total Gross Plant shall equal the sum of Item Nos. A (1)(a)(b)(c) in O&M Attachment 1.

Option 2: Annual Actual O&M Expenses

The Interconnection Customer shall pay for all actual O&M Expenses incurred by the Connecting Transmission Owner, which expenses shall be billed by the Connecting Transmission Owner quarterly as accumulated during the quarter for which they were incurred.

All payments due to be made by the Interconnection Customer shall be made within thirty (30) days after receiving an invoice from the Connecting Transmission Owner, which invoice shall be issued after the end of each quarter for the most recent quarter.

Selection by Interconnection Customer

The Interconnection Customer shall select which option for paying such O&M Expenses by providing written notice to the Connecting Transmission Owner within thirty (30) days after the Gross Connecting Transmission Owner's Interconnection Facilities Plant Investment cost and the most recent Annual Transmission Ongoing Charge Factor have been provided to the Interconnection Customer. If the Interconnection Customer fails to provide timely notice to the Connecting Transmission Owner of the option selected, the Interconnection Customer will be deemed to have selected Option 2: Annual Actual O&M Expenses.

2-9

SERVICE AGREEMENT NO. 2646

O&M ATTACHMENT 1

Capitalized terms used in this calculation will have the following definitions:

Allocation Factor

(1) General Plant Allocation Factor shall equal Electric General Plant divided by the sum of Electric General Plant plus gas general plant as reported in the Annual Report filed with the New York State Public Service Commission.

(2) Gross Transmission Plant Allocation Factor shall equal the total investment in Transmission Plant in Service divided by the sum of the total Transmission Plant in Service plus the total Distribution Plant in Service, excluding Intangible Plant, General Plant and Common Plant.

(3) Transmission Wages and Salaries Allocation Factor shall equal the ratio of Connecting Transmission Owner Transmission-related direct electric wages and salaries including any direct wages or salaries charged to Connecting Transmission Owner by a Connecting Transmission Owner Affiliate to Connecting Transmission Owner's total electric direct wages and salaries including any wages charged to Connecting Transmission Owner by a Connecting Transmission Owner Affiliate excluding any electric administrative and general wages and salaries.

Ratebase and Expense items

(1) Administrative and General Expense shall equal electric expenses as recorded in FERC Account Nos. 920-935.

(2) Amortization of Investment Tax Credits shall equal electric credits as recorded in FERC Account No. 411.4.

(3) Distribution Plant in Service shall equal the gross plant balance as recorded in FERC Account Nos. 360 - 374.

(4) Electric Common Plant shall equal the balance of Common Plant recorded in FERC Account Nos. 389-399 multiplied by the General Plant Allocation Factor.

(5) General Plant shall equal electric gross general plant balance recorded in FERC Account Nos. 389-399.

(6) Materials and Supplies shall equal electric materials and supplies balance as recorded in FERC Account No. 154.

(7) Payroll Taxes shall equal those electric payroll tax expenses as recorded in FERC Account Nos. 408.100, 408.110 and 408.130.

2-1

SERVICE AGREEMENT NO. 2646

(8) Prepayments shall equal electric prepayment balance as recorded in FERC Account No. 165.

(9) Real Estate Tax Expenses shall equal electric transmission-related real estate tax expense as recorded in FERC Account No. 408.140 and 408.180.

(10) Transmission Operation and Maintenance Expense shall equal electric expenses as recorded in FERC Account Nos. 560, 562-573.

(11) Transmission Plant in Service shall equal the gross plant balance as recorded in FERC Account Nos. 350-359.

(12) Transmission Revenue Credits shall equal the revenue reported in Account 456

(13) Transmission Related Bad Debt Expense shall equal Bad Debt Expense as reported in Account 904 related to transmission billing.

(14) Wholesale Metering Cost shall equal any costs associated with any Revenue or Remote Terminal Unit (RTU) meters and associated equipment located at an internal or external tie at voltages equal to or greater than 23V. The cost shall be determined by multiplying the number of wholesale meters in FERC Account No. 370.3 by the average cost of the meters plus the average costs of installation.

In the event that the above-referenced FERC accounts are renumbered, renamed, or otherwise modified, the above sections shall be deemed amended to incorporate such renumbered, renamed, modified or additional accounts.

Revenue Requirement Components

The Revenue Requirement Components shall be the sum of Connecting Transmission Owner's (A) Return and Associated Income Taxes, (B) Transmission Related Real Estate Tax Expense, (C) Transmission Related Amortization of Investment Tax Credits, (D) Transmission Related Payroll Tax Expense (E) Transmission Operation and Maintenance Expense, (F) Transmission Related Administrative and General Expenses, less (G) Revenue Credits, plus (H) Bad Debt Expense.

A. Return and Associated Income Taxes shall equal the product of the Transmission Investment Base as identified in A(1) below and the Cost of Capital Rate.

1. Transmission Investment Base shall be defined as

Transmission Related General Plant plus Transmission Related Common Plant plus Transmission Related Regulatory Assets plus Transmission Related Prepayments plus Transmission Related Materials and Supplies plus Transmission Related Cash Working Capital.

(a) Transmission Plant in Service shall equal the balance of Total investment in Transmission Plant plus Wholesale Metering Cost.

2-2

SERVICE AGREEMENT NO. 2646

(b) Transmission Related General Plant shall equal the balance of investment in General Plant multiplied by the Transmission Wages and Salaries Allocation Factor.

(c) Transmission Related Common Plant shall equal Electric Common Plant multiplied by the Gross Transmission Plant Allocation Factor and multiplied by the Transmission Wages and Salaries Allocation Factor.

(d) Transmission Related Regulatory Assets shall equal balances in FERC Account Nos. 182.3 and 254 for state and federal regulatory assets and liabilities related to FAS109, and excess AFUDC multiplied by the Gross Transmission Plant Allocation Factor

(e) Transmission Related Prepayments shall equal the electric balance of Prepayments multiplied by the Gross Transmission Plant Allocation Factor.

(f) Transmission Related Materials and Supplies shall equal the balance of Materials and Supplies assigned to Transmission added to the remainder of Material and Supplies not directly assigned to either Transmission or Distribution multiplied by the Gross Transmission Plant Allocation Factor.

(g) Transmission Related Cash Working Capital shall be a 12.5% allowance (45 days/360 days) of the Transmission Operation and Maintenance Expense (less FERC Account 565: Transmission of Electricity by Others) and Transmission-Related Administrative and General Expense.

2. Cost of Capital Rate

The Cost of Capital Rate shall equal the proposed Weighted Costs of Capital plus Federal Income Taxes and State Income Taxes.

(a) The Weighted Costs of Capital will be calculated for the Transmission Investment Base using Connecting Transmission Owner's actual capital structure and will equal the sum of (i), (ii), and (iii) below:

(i) the long-term debt component, which equals the product of the actual weighted average embedded cost to maturity of Connecting Transmission Owner's long-term debt then outstanding and the actual long-term debt capitalization ratio.

SERVICE AGREEMENT NO. 2646

(ii) the preferred stock component, which equals the product of the actual weighted average embedded cost to maturity of Connecting Transmission Owner's preferred stock then outstanding and the actual preferred stock capitalization ratio;

(iii) the return on equity component, shall be the product of the allowed ROE of 11.9% plus a 50 basis point adder (per FERC Order 697 and 697A) and Connecting Transmission Owner's actual common equity capitalization ratio.

(b) Federal Income Tax shall equal

$$\frac{A \times \text{Federal Income Tax Rate}}{(1 - \text{Federal Income Tax Rate})}$$

where A is the sum of the preferred stock component and the return on equity component, each as determined in Sections 2.(a)(ii) and for the ROE set forth in 2.(a)(iii) above

(c) State Income Tax shall equal

$$\frac{(A + \text{Federal Income Tax}) \times \text{State Income Tax Rate}}{(1 - \text{State Income Tax Rate})}$$

Where A is the sum of the preferred stock component and the return on equity component as determined in A.2.(a)(ii) and A.2.(a)(iii) above and Federal income Tax is determined in 2.(b) above.

B. Transmission Related Real Estate Tax Expense shall equal the Real Estate Tax Expenses multiplied by the Gross Plant Allocation Factor.

C. Transmission Related Amortization of Investment Tax Credits shall equal the electric Amortization of Investment Tax Credits multiplied by the Gross Transmission Plant Allocation Factor.

D. Transmission Related Payroll Tax Expense shall equal Payroll Taxes multiplied by the Transmission Wages and Salaries Allocation Factor.

E. Transmission Operation and Maintenance Expense shall equal the Transmission Operation and Maintenance Expense as previously defined.

F. Transmission Related Administrative and General Expenses shall equal the sum of the electric Administrative and General Expenses multiplied by the Transmission Wages and Salaries Allocation Factor.

G. Revenue Credits shall equal all Transmission revenue recorded in FERC account 456.

SERVICE AGREEMENT NO. 2646

H. Transmission Related Bad Debt Expense shall equal Transmission Related Bad Debt Expense as previously defined.

2-5

SERVICE AGREEMENT NO. 2646

Attachment 3

One-line Diagram Depicting the Small Generating Facility, Interconnection Facilities, Metering Equipment, and Upgrades

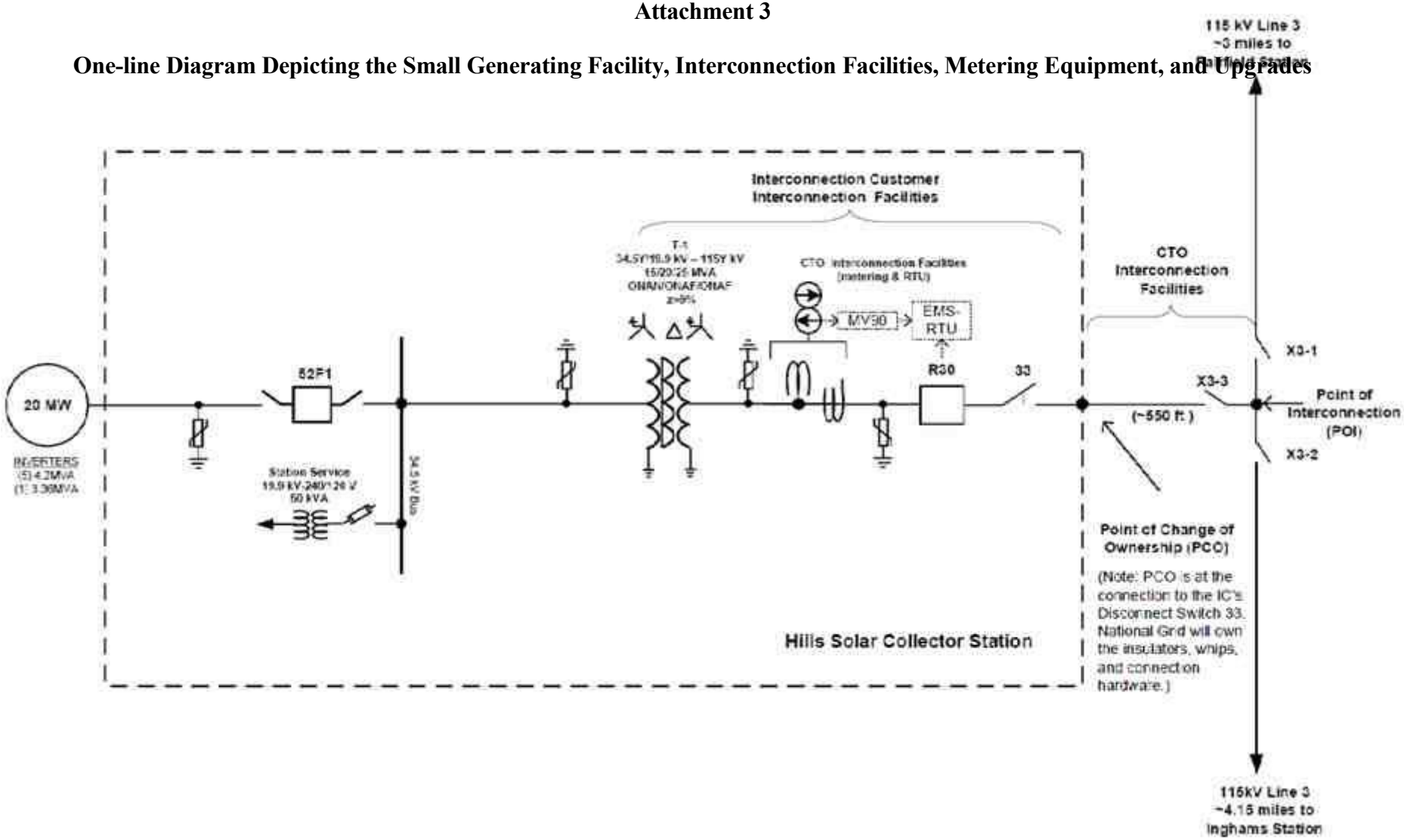

3-1

SERVICE AGREEMENT NO. 2646

Attachment 4

Milestones

1. Milestones

In-Service Date: July 2023

Critical milestones and responsibility as agreed to by the Parties:

MILESTONE	Interconnection Facilities and System Upgrade Facilities
1. Execute interconnection agreement	
2. Provide initial prepayment/security	
3. Issue written authorization to proceed with engineering and procurement	
4. Start engineering on Connecting Transmission Owner's Interconnection Facilities and System Upgrade Facilities	
5. Start engineering on Interconnection Customer's Interconnection Facilities	
6. Start procurement for Connecting Transmission Owner's Interconnection Facilities and System Upgrade Facilities	
7. Start procurement for Interconnection Customer's Interconnection Facilities	
8. Complete engineering on Interconnection Customer's Interconnection Facilities (including Connecting Transmission Owner approvals)	
9. Provision of security for construction Connecting Transmission Owner's	

DATE	RESPONSIBLE PARTY
09/2021	Connecting Transmission Owner/ Interconnection Customer
10/2021	Interconnection Customer
10/2021	Interconnection Customer
11/2021	Connecting Transmission Owner
12/2021	Interconnection Customer
03/2022	Connecting Transmission Owner
04/2022	Interconnection Customer
09/2022	Connecting Transmission Owner/ Interconnection Customer
09/2022	Interconnection Customer

4-1

SERVICE AGREEMENT NO. 2646

	MILESTONE	DATE	RESPONSIBLE PARTY
10.	Issue written authorization to proceed with construction	09/2022	Interconnection Customer
11.	Complete engineering on Connecting Transmission Owner's Interconnection Facilities and System Upgrade Facilities	12/2022	Connecting Transmission Owner
12.	Complete procurement for Interconnection Customer's Interconnection Facilities	01/2023	Interconnection Customer
13.	Start construction of System Upgrade Facilities and Connecting Transmission Owner's Interconnection Facilities	02/2023	Connecting Transmission Owner
14.	Complete procurement for Connecting Transmission Owner's Interconnection Facilities and System Upgrade Facilities	02/2023	Connecting Transmission Owner
15.	Start construction of Interconnection Customer's Interconnection Facilities	02/2023	Interconnection Customer
16.	Complete construction of Interconnection Customer's Interconnection Facilities	04/2023	Interconnection Customer
17.	Start construction of Line 3 Tap (Connecting Transmission Owner's Interconnection Facilities)	05/2023	Connecting Transmission Owner
18.	Complete construction and testing of System Upgrade Facilities and Connecting Transmission Owner's Interconnection Facilities	06/2023	Connecting Transmission Owner
19.	Field verification and witness testing of Interconnection Customer's Interconnection Facilities	07/2023	Connecting Transmission Owner/ Interconnection Customer
20.	Initial Synchronization Date	07/2023	Connecting Transmission Owner/ Interconnection Customer
21.	In-Service Date	07/2023	Interconnection Customer

	4-2		

SERVICE AGREEMENT NO. 2646

	MILESTONE	DATE	RESPONSIBLE PARTY
22.	Complete testing and commissioning of Small Generating Facility	07/2023	Interconnection Customer
23.	Commercial Operation Date	07/2023	Interconnection Customer
24.	Submit Interconnection Customer's Interconnection Facilities as builts	08/2023	Connecting Transmission Owner
25.	Complete System Upgrade Facilities and Connecting Transmission Owner's Interconnection Facilities as builts	10/2023	Connecting Transmission Owner
26.	Complete review/acceptance of Interconnection Customer's Interconnection Facilities as builts	10/2023	Connecting Transmission Owner
27.	Complete project closeout and final invoicing	12/2023	Connecting Transmission Owner

These milestones are contingent upon, but not limited to, outage scheduling, and the Interconnecting Customer's successful compliance with all interconnection requirements and timely completion of its obligations in Project Specific Specifications and this Agreement. Due to the COVID-19 pandemic, the ability to deliver this project in accordance with these milestones may be at risk. Any such impacts shall be addressed in accordance with Article 6.2 of this Agreement.

2. Security Arrangements

In lieu of posting the security contemplated by Article 6.3 of this Agreement, and as agreed upon by the Connecting Transmission Owner and Interconnection Customer pursuant to Article 6.1.1 of this Agreement, the Interconnection Customer has elected to prepay Connecting Transmission Owner for its estimated costs to design, engineer, procure, construct, and install Connecting Transmission Owner's Interconnection Facilities and Upgrades, such prepayment to be made in accordance with the following schedule:

(1) $992,200.00, such amount to be due and payable at least twenty (20) Business Days prior to Interconnection Customer's issuance of the written authorization to proceed with engineering and procurement contemplated by Milestone 3 in the table contained in Section 1 of this Attachment 4; and

(2) an additional $1,600,300.00 (the "Construction Prepayment"), subject to

adjustment as contemplated below, such amount to be due and payable at least twenty (20) Business Days prior to Interconnection Customer's issuance of the

	4-3		

written authorization to proceed with construction contemplated by Milestone 10 in the table contained in Section 1 of this Attachment 4.

The actual amount of the Construction Prepayment to be paid by Interconnection Customer may be adjusted by Connecting Transmission Owner following completion of engineering for Connecting Transmission Owner's Interconnection Facilities and System Upgrade Facilities; Connecting Transmission Owner shall provide written notice to Interconnection Customer of the adjusted Construction Prepayment amount, together with reasonable supporting documentation of the related cost estimates.

The Connecting Transmission Owner shall not be obligated to commence engineering or construction, as applicable, unless the Connecting Transmission Owner has received payment in full of the corresponding prepayment as contemplated above.

As agreed to by Interconnection Customer and Connecting Transmission Owner, the Connecting Transmission Owner shall issue Interconnection Customer an invoice on a monthly basis detailing Interconnection Customer's cost responsibility under this Agreement and providing the net amount, if any, due to Connecting Transmission Owner after Connecting Transmission Owner has applied the prepayment amounts towards settlement of the invoice. If any amount is due from Interconnection Customer, it shall make such payments pursuant to Article 6.1.1 of this Agreement.

The prepayment amounts are estimates only and shall not limit Interconnection Customer's obligation to pay Connecting Transmission Owner for all costs actually incurred by Connecting Transmission Owner to design, engineer, procure, construct, and install Connecting Transmission Owner's Interconnection Facilities and Upgrades as contemplated by this Agreement, and for any other unpaid amounts due and payable by Interconnection Customer under the terms of this Agreement.

4-4

SERVICE AGREEMENT NO. 2646

Attachment 5

Additional Operating Requirements for the New York State Transmission System, the Distribution System and Affected Systems Needed to Support the Interconnection Customer's Needs

The NYISO, in consultation with the Connecting Transmission Owner, shall also provide requirements that must be met by the Interconnection Customer prior to initiating parallel operation with the New York State Transmission System or the Distribution System.

The Interconnection Customer must comply with all applicable NYISO tariffs and procedures, as amended from time to time.

To the extent not inconsistent with the terms of this Agreement, the ISO OATT, or applicable NYISO procedures, Interconnection Customer must comply with Connecting Transmission Owner's operating instructions and requirements, which requirements shall include the dedicated data circuits, including system protection circuits, to be maintained by Interconnection Customer in accordance with Article 1.5 of this Agreement. Interconnection Customer must also comply with the applicable requirements as set out in the Connecting Transmission Owner's ESBs, which have been identified and provided to the Interconnection Customer as amended from time to time to the extent not inconsistent with the terms of this Agreement or applicable NYISO tariffs and procedures. Upon the Connecting Transmission Owner's notice to the Interconnection Customer of amendments to the ESBs, the Interconnection Customer has 30 days to comply with such amendments.

5-1

SERVICE AGREEMENT NO. 2646

Attachment 6

Connecting Transmission Owner's Description of its Upgrades and Best Estimate of Upgrade Costs

The NYISO, in consultation with the Connecting Transmission Owner, shall describe Upgrades and provide an itemized best estimate of the cost, including overheads, of the Upgrades and annual operation and maintenance expenses associated with such Upgrades. The Connecting Transmission Owner shall functionalize Upgrade costs and annual expenses as either transmission or distribution related.

The cost estimate for System Upgrade Facilities and System Deliverability Upgrades shall be taken from the ISO OATT Attachment S cost allocation process or applicable Interconnection Study, as required by Section 32.3.5.3.2 of Attachment Z. The cost estimate for Distribution Upgrades shall include the costs of Distribution Upgrades that are reasonably allocable to the Interconnection Customer at the time the estimate is made, and the costs of any Distribution Upgrades not yet constructed that were assumed in the Interconnection Studies for the Interconnection Customer but are, at the time of the estimate, an obligation of an entity other than the Interconnection Customer.

The cost estimates for Distribution Upgrades, System Upgrade Facilities, and System Deliverability Upgrades are estimates. The Interconnection Customer is ultimately responsible for the actual cost of the Distribution Upgrades, System Upgrade Facilities, and System Deliverability Upgrades needed for its Small Generating Facility, as that is determined under Attachments S, X, and Z of the ISO OATT.

A. DISTRIBUTION UPDGRADE

None.

B. STAND-ALONE SYSTEM UPGRADE FACILITIES ("SUF")

None.

C. OTHER SYSTEM UPGRADE FACILITIES

The interconnection of the Small Generating Facility requires system modifications at Connecting Transmission Owner's existing Inghams and Fairfield Substations as further described below.

1. Inghams Substation

a) Line 3 Protection Packages

The existing Line 3 protection is a POTT for the 'A' package and step distance for the 'B' package. The existing 'A' relay (SEL-321) will be reused and reset to accommodate the generation. The existing 'B' package relay cannot be reset to accommodate the generation and

shall be replaced with a vertical mount SEL-311C in panel 30. DTT transmit and receive to the Hills Solar Collector Substation will be added. DTT will be sent to the Hills Solar Collector Substation for a line relay operation, R3 breaker failure and if R3 is open. DTT for breaker failure will be received from the Hills Solar Collector Substation. A SEL-351-6 will be added for DTT receive supervision, and a GARD8000 will be added for DTT to and from the Hills Solar Collector Substation. The new equipment for the DTT to the Hills Solar Collector Substation will be installed in existing panel 28.

b) Controls and Integration

The existing RTUs are sufficient for the scope of this project with the following modifications:

- one (1) new I/O card will be installed to accommodate the additions required;
- one (1) RE-01 control handle capable of remote operation for breaker R3 shall be installed to allow for the manual trip(open)/close operation and to provide status of the trip coil(s); and
- one (1) RE-43A/M control handle capable of remote operation for breaker R3 shall be installed to allow for enabling/disabling of the automatic reclose function.

c) Telecommunications

A new Verizon facility will be installed into Inghams Substation and will consist a Verizon fiber cable from the control house to a Connecting Transmission Owner - Verizon meet point pole outside the station and a Verizon fiber mux installed inside the control house. Connecting Transmission Owner will provide 4”, Schedule 80 PVC conduit from the control house to the meet point. A DC converter system shall be installed in the dedicated telecom rack to convert station battery to -48VDC to support the Verizon fiber mux.

Connecting Transmission Owner will order one (1) Verizon DS1 circuit from Inghams Substation to the Hills Solar Collector Substation to support DTT teleprotection. The DS1 will be extended from the Verizon fiber demarcation point to the Gard 8000 rack location in the control house using Cat 6 cable.

2. Fairfield Substation

a) Line 3 Protection Packages

The existing Line 3 protection is a POTT for the ‘A’ package and step distance for the ‘B’ package. The existing relays, SEL-311C (‘A’ package) and L-PRO 2100 (‘B’ package) will be reused and reset to accommodate the generation. DTT transmit and receive to the Hills Solar Collector Substation will be added. DTT will be sent to the Hills Solar Collector Substation for a line relay operation, R30 or R815 breaker failure and if both R30 and R815 are open. DTT for

breaker failure will be received from the Hills Solar Collector Substation. A SEL-351-6 will be added for DTT receive supervision and will be used to trip and drive reclosing to lockout. A

SERVICE AGREEMENT NO. 2646

GARD8000 will be added for DTT to and from the Hills Solar Collector Substation. The new equipment will be added to the top of Panel 4A.

b) Controls and Integration

The existing RTU is sufficient for the scope of this project with the following modifications:

- one (1) new I/O card will be installed to accommodate the additions required;
- one (1) RE-01 control handle capable of remote operation for breaker R30 shall be installed to allow for the manual trip(open)/close operation and to provide status of the trip coil(s); and
- one (1) RE-43A/M control handle capable of remote operation for breaker R30 shall be installed to allow for enabling/disabling of the automatic reclose function.

c) Telecommunications

The existing Verizon fiber facility at Fairfield Substation will be used. One (1) Verizon DS1 circuit from Fairfield Substation to the Hills Solar Collector Substation will be ordered to support DTT teleprotection. The DS1 will be extended from the Verizon fiber demarcation point to the Gard 8000 rack location in the control house using Cat 6 cable.

D. COST ESTIMATES REALTED TO DISTRIBUTION UPGRADES AND SYSTEM UPGRADE FACILITIES

The total estimated costs (+30%/-15%) of the work associated with the System Upgrade Facilities required for the interconnection of the Small Generating Facility are presented in the table below.

System Upgrade Facilities (SUFs)

Engineering, design, construction, testing and commissioning of modifications at remote stations.

Fairfield Station	**$206,200**
Inghams Station	**$358,600**
SUF Subtotal	***$564,800***
Subtotal	**$564,800**
Contingency	$128,600
TOTAL	**$693,400**

6-3

SERVICE AGREEMENT NO. 2646

As described in the Facilities Study for the Small Generating Facility, the estimates provided herein:

Assume:

- 5X10 construction work week;
- outages are available;
- permitting is not required; and
- existing equipment to remain is functional.

Exclude (as applicable):

- discussions and negotiations of issued interconnection study;
- application fees;
- applicable surcharges;
- overall project sales tax;
- property taxes;
- line switching;
- property/easement acquisitions;
- future operation and maintenance costs;
- recurring monthly communications circuits' charges, if any, responsible by the Interconnection Customer to the communications utility;
- soil testing;
- adverse field conditions such as rock, water, weather, and Interconnection Customer electrical equipment obstructions;
- environmental mitigation;
- extended engineering to minimize outage time or Connecting Transmission Owner's public duty to serve;
- extended craft labor hours, to minimize outage and/or construction time; or

- any required permits.

SERVICE AGREEMENT NO. 2646

Cost adders estimated for overtime will be based on 1.5 and 2 times labor rates if required for work beyond normal business hours. Meals and equipment are also extra costs incurred for overtime labor.

6-5

SERVICE AGREEMENT NO. 2646

Attachment 7

Insurance Coverage

Commercial General Liability Insurance including, but not limited to, bodily injury, property damage, products/completed operations, contractual and personal injury liability with a combined single limit of $1 million per occurrence, $2 million annual aggregate.

7-1

SERVICE AGREEMENT NO. 2646

Attachment 8

Initial Synchronization Date

[**Date**]

New York Independent System Operator, Inc.
Attn: Vice President, Operations
10 Krey Boulevard
Rensselaer, NY 12144

Niagara Mohawk Power Corporation d/b/a National Grid
Attention: Director, Transmission Commercial Services
40 Sylvan Road
Waltham, MA 02541-1120

Re: Hills Solar Project Small Generating Facility

Dear :

On **[Date] [Interconnection Customer]** initially synchronized the Small Generating Facility **[specify units, if applicable]**. This letter confirms that **[Interconnection Customer]**'s Initial Synchronization Date was **[specify]**.

Thank you.

[**Signature**]

[**Interconnection Customer Representative**]

SERVICE AGREEMENT NO. 2646

Attachment 9

Commercial Operation Date

[Date]

New York Independent System Operator, Inc.
Attn: Vice President, Operations
10 Krey Boulevard
Rensselaer, NY 12144

Niagara Mohawk Power Corporation d/b/a National Grid
Attention: Director, Transmission Commercial Services
40 Sylvan Road
Waltham, MA 02541-1120

Re: Hills Solar Project Small Generating Facility

Dear _____:

On **[Date] [Interconnection Customer]** has completed Trial Operation of Unit No. ___. This letter confirms that **[Interconnection Customer]** commenced Commercial Operation of the Small Generating Facility **[specify units, as applicable]**, effective as of **[Date plus one day]**.

Thank you.

[Signature]

[Interconnection Customer Representative]

9-1